POWERTIP TECH. CORP.

SPECIFICATIONS

CUSTOMER	:	PTC
SAMPLE CODE	:	NSC1602WRP-GWA-I
MASS PRODUCTION CODE	:	NPC1602WRP-GWA-I
SAMPLE VERSION	:	01
SPECIFICATIONS EDITION	:	002
DRAWING NO. (Ver.)	:	JLMD- NPC1602WRP-GWA-I_002
PACKAGING NO. (Ver.)	:	JPKG- NPC1602WRP-GWA-I_001

Customer Approved

Date:

POWERTIP
2015.05.22
JS RD APPROVED

Approved	Checked	Designer
閆偉	劉進	周志仙

☐ Preliminary specification for design input

■ Specification for sample approval

POWERTIP TECH. CORP.

Headquarters: No.8, 6th Road, Taichung Industrial Park, Taichung, Taiwan
台中市 407 工業區六路 8 號

TEL: 886-4-2355-8168
FAX: 886-4-2355-8166

E-mail: sales@powertip.com.tw
Http://www.powertip.com.tw

History of Version

Date (mm / dd / yyyy)	Ver.	Edi.	Description	Page	Design by
05/15/2014	01	001	New Drawing	-	周志仙
04/15/2015	01	002	New Sample	-	周志仙

Total：30 Pages

Contents

Note : For detailed information please refer to IC data sheet : SITRONIX---ST7066U-0A

1. SPECIFICATIONS

1.1 Features

Item	Standard Value
Display Type	16*2 Characters
LCD Type	PBT，Negative，Transmissive
Driver Condition	LCD Module： 1/16 Duty，1/5 Bias
Viewing Direction	6 O'clock
Weight	32.8g
Interface	6800-series 8-bit parallel
Driver IC	ST7066U
ROHS	THIS PRODUCT CONFORMS THE ROHS OF PTC Detail information please refer web site : http://www.powertip.com.tw/news.php?area_id_view=1085560481/

1.2 Mechanical Specifications

Item	Standard Value	Unit
Outline Dimension	80.0 (L) * 36.0 (W) *12.7 (H)	mm
Viewing Area	66.0 (L) * 16.0 (W)	mm
Active Area	56.2 (L) * 11.5 (W)	mm
Character Size	2.95(L) * 5.55(W)	mm
Character Pitch	3.55(L) * 5.95(W)	mm

Note：For detailed information please refer to LCM drawing

1.3 Absolute Maximum Ratings

Item	Symbol	Condition	Min.	Max.	Unit
Power Supply Voltage	V_{DD}	-	-0.3	7.0	V
LCD Driver Supply Voltage	V_{LCD}	-	V_{DD} -10.0	V_{DD} +0.3	
Input Voltage	V_{IN}	-	-0.3	V_{DD}+0.3	V
Operating Temperature	T_{OP}	-	-20	70	℃
Storage Temperature	T_{ST}	-	-30	80	℃
Storage Humidity	H_D	Ta＜60 ℃	-	90	%RH

1.4 DC Electrical Characteristics

Ta = 25℃

Item	Symbol	Condition	Min.	Typ.	Max.	Unit
Logic Supply Voltage	V_{DD}	-	4.5	5.0	5.5	V
“H” Input Voltage	V_{IH}	-	0.7 V_{DD}	-	V_{DD}	V
“L” Input Voltage	V_{IL}	-	-0.3	-	0.6	V
“H” Output Voltage	V_{OH}	I_{OH}=-0.1mA	3.9	-	V_{DD}	V
“L” Output Voltage	V_{OL}	I_{OL}=0.1mA	-	-	0.4	V
Supply Current	I_{DD}	V_{DD}= 5.0 V ,Vo= 0.8 V	-	6	8	mA
LCM Driver Voltage	V_O	-20℃ (V_{DD}= 5.0 V)	1.0	0.8	0.6	V
		25℃ (V_{DD}= 5.0 V)	1.0	0.8	0.6	
		70℃ (V_{DD}= 5.0 V)	1.0	0.8	0.6	

NOTE: *1 The Maximum current display

1.5 Optical Characteristics

LCD Panel：1/16 Duty，1/5 Bias，V_{LCD} = 8.3 V，Ta =25℃

Item		Symbol	Conditions	Min.	Typ.	Max.	Unit	Reference
Response Time	Rise	tr	-	-	70	105	ms	Note 2
	Fall	tf		-	30	45		
Viewing angle range	Top	θ+	C≥2.0	-	60	-	Deg.	Note 1
	Bottom	θ-		-	60	-		
	Left	θL		-	60	-		
	Right	θR		-	60	-		
Contrast Ratio		C	-	-	118	-	-	Note 3
Average Brightness (with LCD)		IV	IF= 40 mA	30	40	-	cd/m²	Note 4
Color of CIE Coordinate (With LCD)		X		0.22	0.27	0.32	-	
		Y		0.19	0.24	0.29		
Uniformity		△B		70	-	-	%	

Note 4 ：

1：△B=B(min) / B(max) * 100%

2：Measurement Condition for Optical Characteristics:

a：Environment: 25℃±5℃ / 60±20%R.H，no wind，dark room below 10 Lux at typical lamp current and typical operating frequency.

b：Measurement Distance: 500 ± 50 ㎜ ，(θ= 0°)

c：Equipment: TOPCON BM-7 fast，(field 1°)，after 10 minutes operation.

d：The uncertainty of the C.I.E coordinate measurement ±0.01，Average Brightness ± 4%

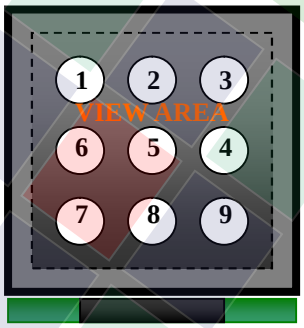

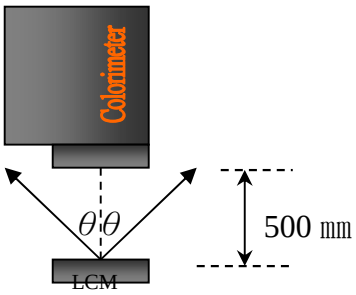

Colorimeter=BM-7 fast

Note 1.

Optical characteristics-2

Viewing angle

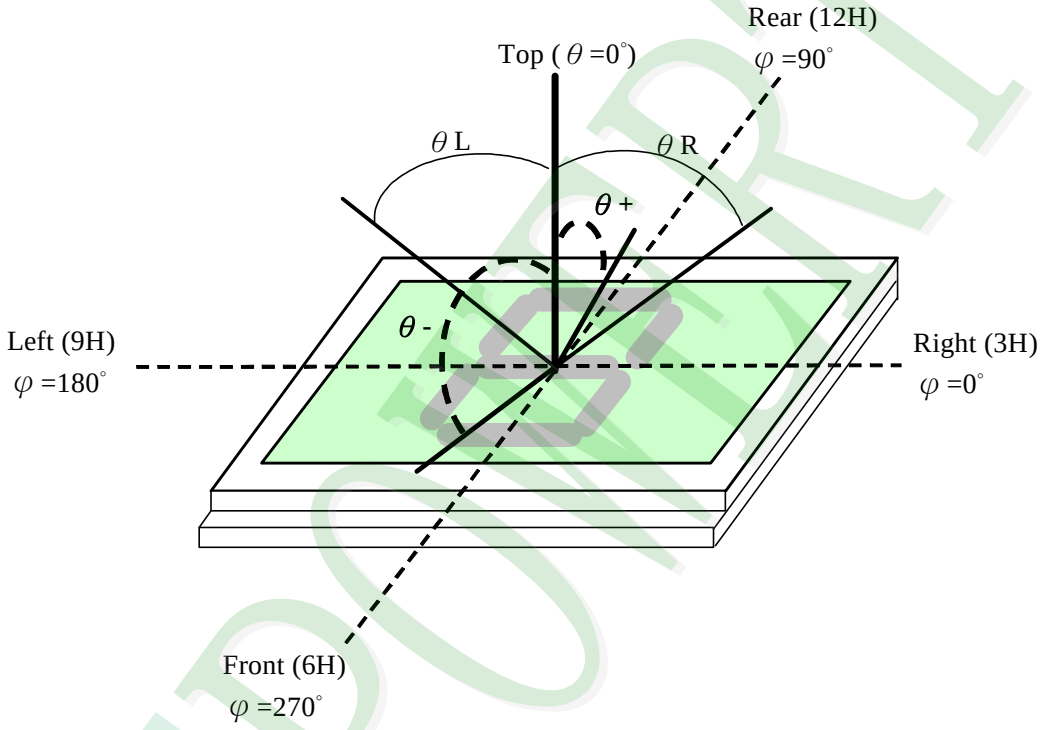

Viewing angle

Note 2.

Optical characteristics-3

Fig.2 Definition of response time

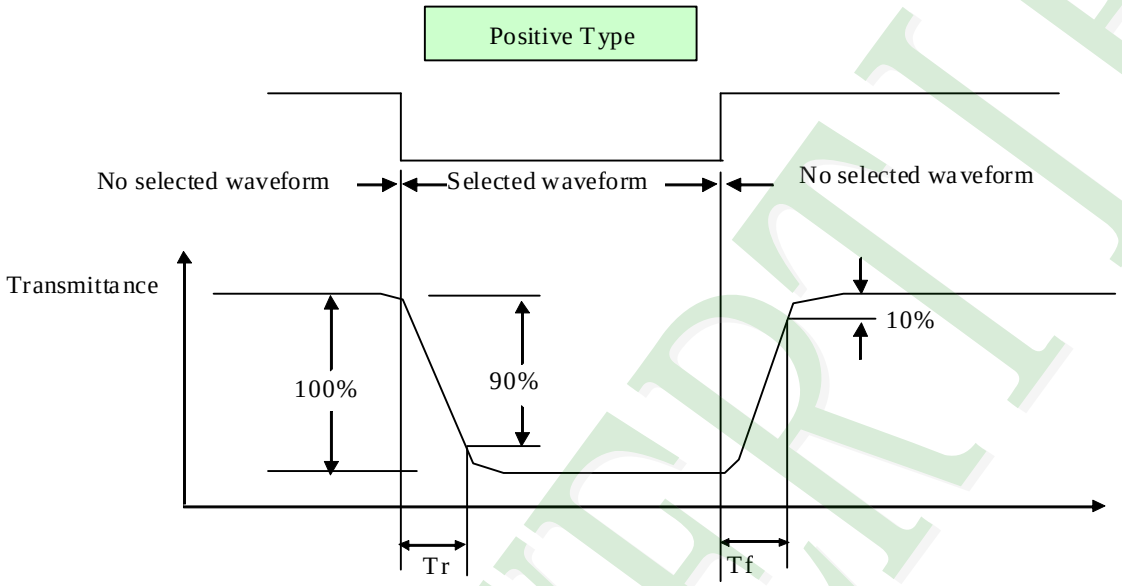

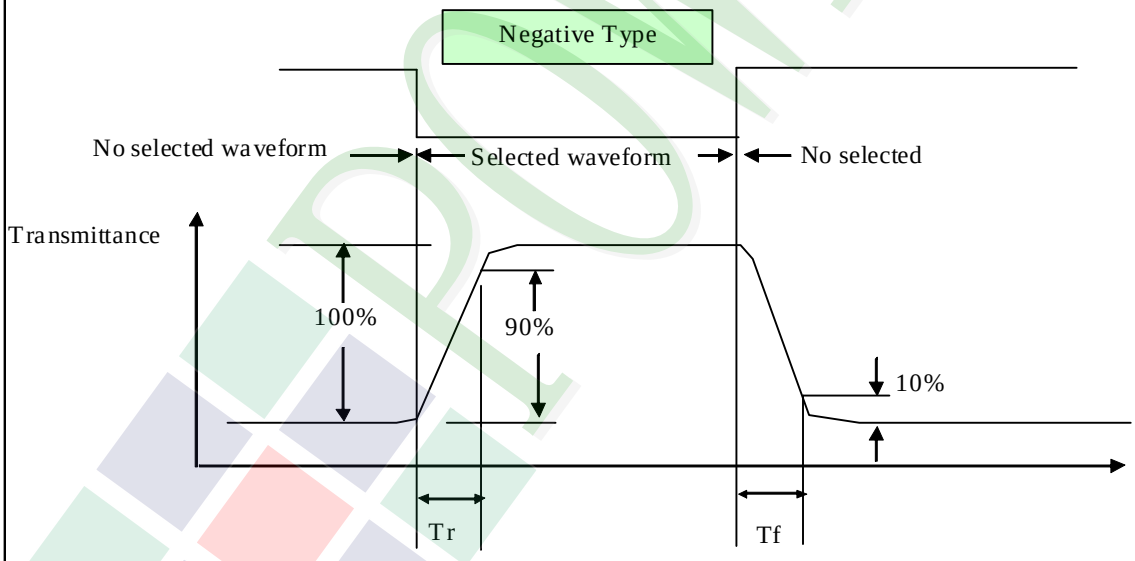

Electrical characteristics-2

※2 Drive waveform

Vop: Drive voltage fF: Frame frequency

1/B: Bias fD: Drive frequency

N: Duty

(1) Selected waveform

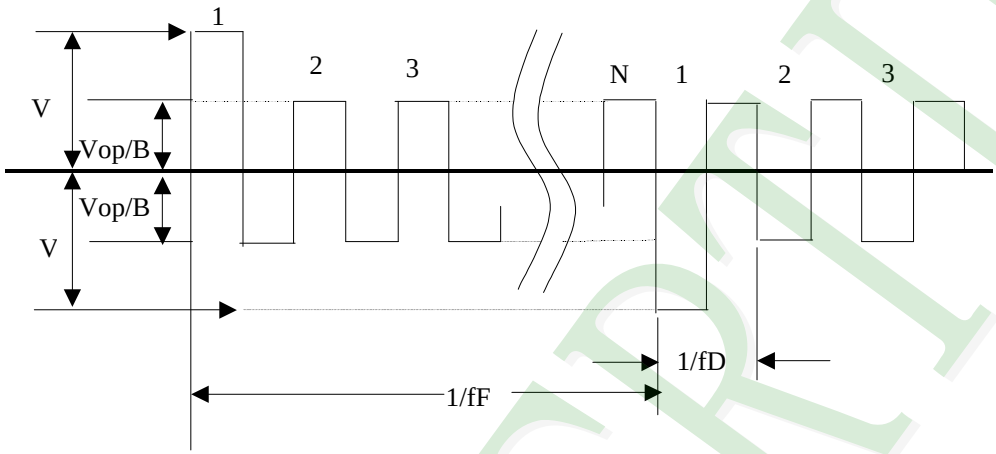

(2) Non- Selected wave form

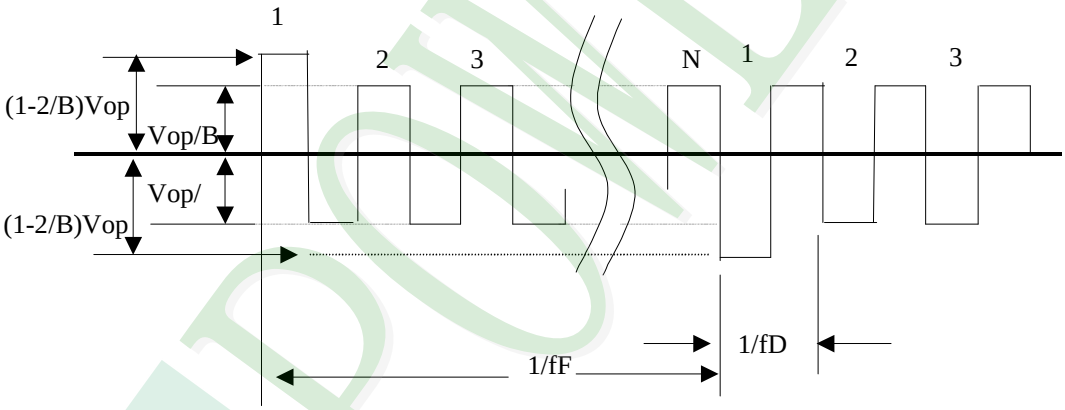

Note:
Frame frequency is defined as follows: Common side supply voltage peak - to - peak /2 = 1 period

Note 3. : Definition of Vth

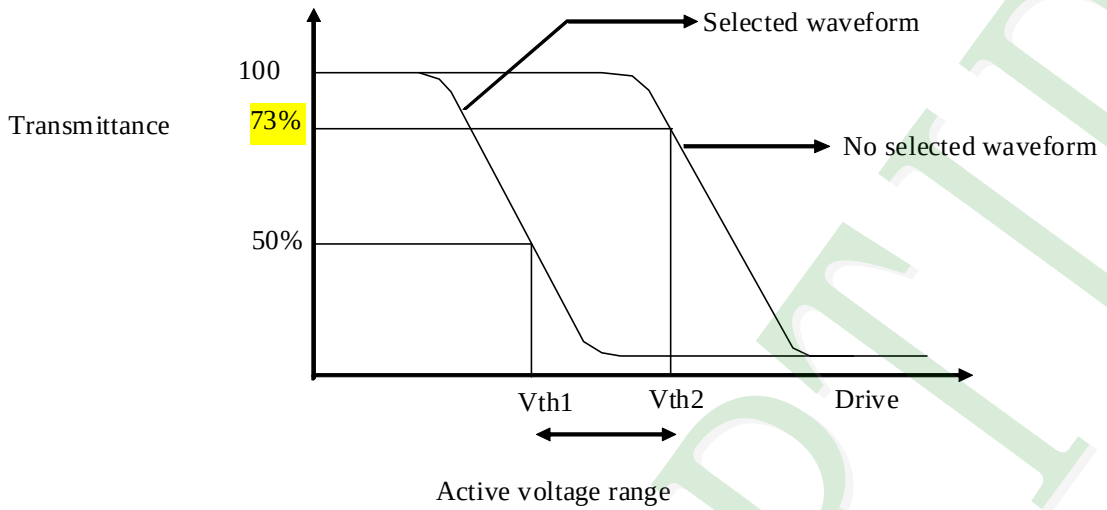

	Vth1	Vth2
View direction	10°	40°
Drive waveform	(Selected waveform)	(No selected waveform)
Transmittance	50%	73%

※1 Contrast ratio
= (Brightness in OFF state) / (Brightness in ON state)

Outline of Electro-Optical Characteristics Measuring System

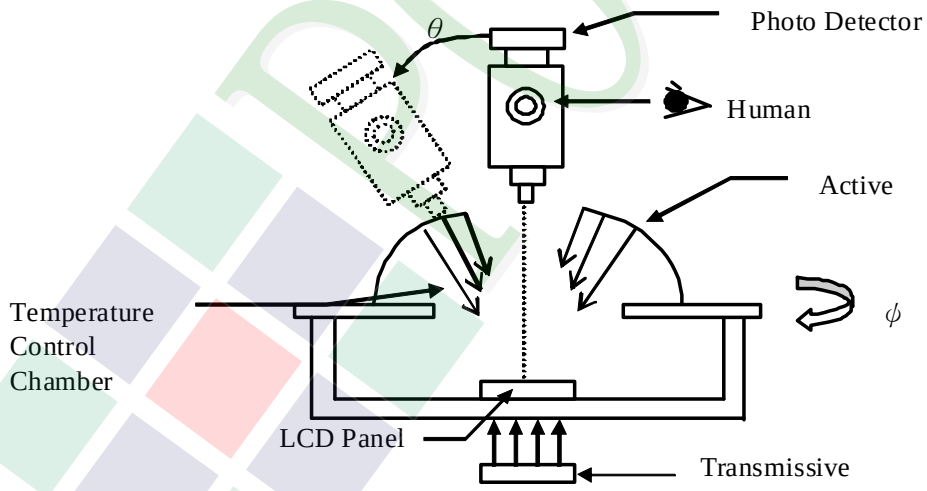

Measuring System: Autronic DMS-803

1.6 Backlight Characteristics

Maximum Ratings

Item	Symbol	Conditions	Min.	Max.	Unit
Forward Current	IF	Ta =25℃	-	40	mA
Reverse Voltage	VR	Ta =25℃	-	5	V
Power Dissipation	PD	Ta =25℃	-	132	mW

Electrical / Optical Characteristics

Item	Symbol	Conditions	Min.	Typ.	Max.	Unit
Forward Voltage	VF	IF= 40 mA	3.0	3.3	3.6	V
Average Brightness (without LCD)	IV		1200	1500	-	cd/m^2
CIE Color Coordinate (Without LCD)	X		0.26	0.29	0.31	-
	Y		0.26	0.29	0.31	
Color	White					

Internal Circuit Diagram:

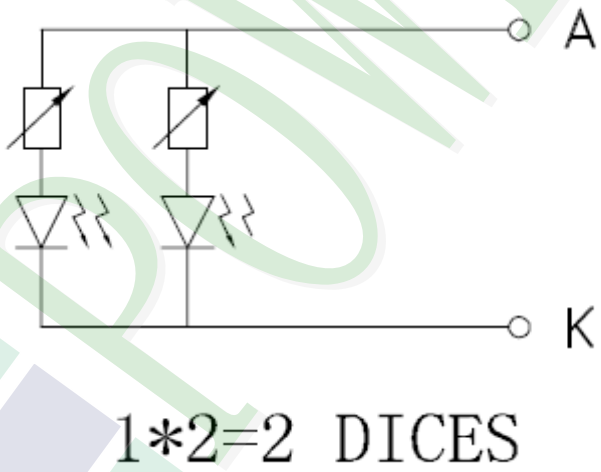

2. MODULE STRUCTURE

2.1 Counter Drawing

2.1.1 LCM Mechanical Diagram

* See Appendix

2.1.2 Block Diagram

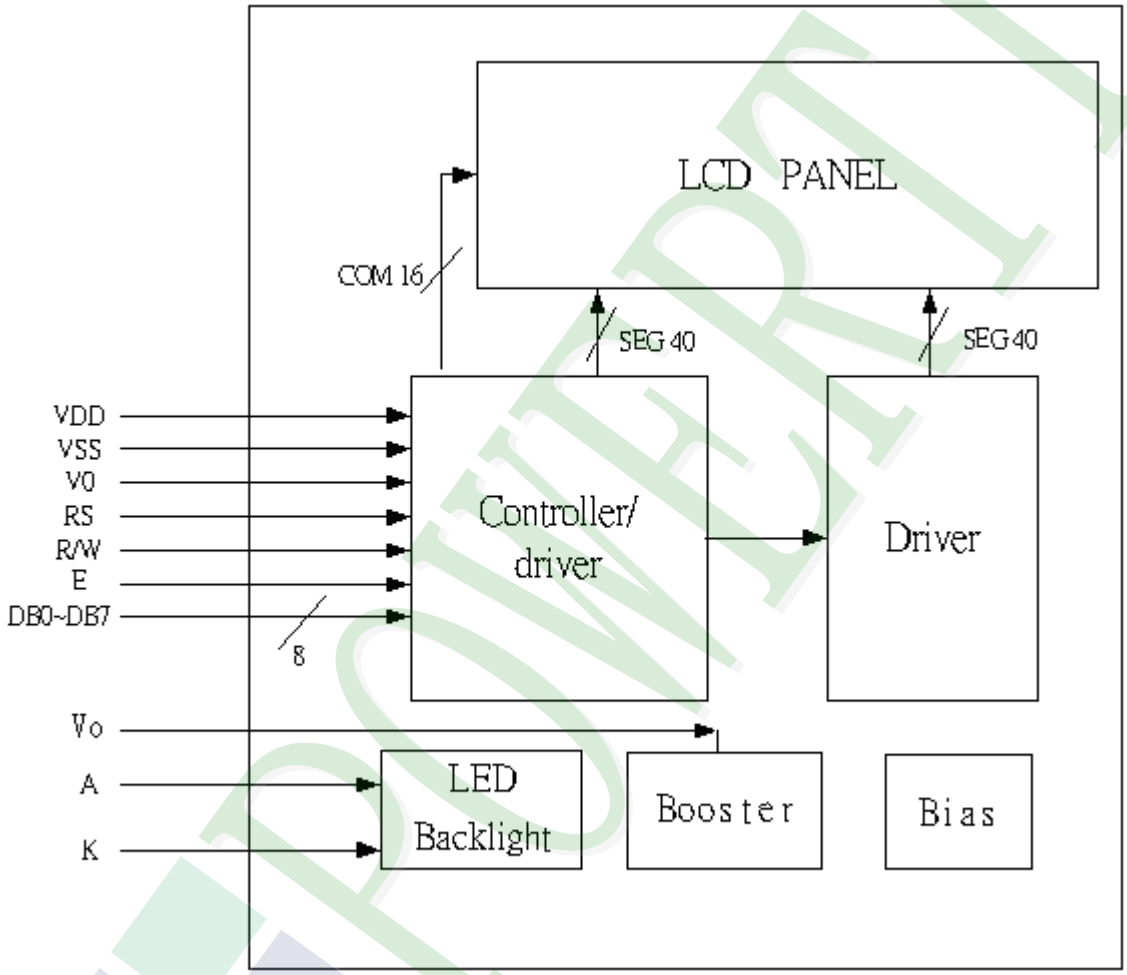

2.2 Interface Pin Description

Pin No.	Symbol	Signal Description
1	V_{SS}	Power Supply (Vss=0)
2	V_{DD}	Power Supply (5V)
3	V_O	Operating voltage for LCD
4	RS	Register Selection input High = Data register Low = Instruction register (for write) Busy flag address counter (for read)
5	R/W	Read/Write signal input is used to select the read/write mode High = Read mode, Low = Write mode
6	E	Start enable signal to read or write the data
7	DB0	Four low order bi-directional three-state data bus lines. Use for data transfer between the MPU and the LCD module. These four are not used during 4-bit operation.
8	DB1	
9	DB2	
10	DB3	
11	DB4	Four high order bi-directional three-state data bus lines. Used for data transfer between the MPU and the LCD module. DB7 can be used as a busy flag.
12	DB5	
13	DB6	
14	DB7	
15	A	LED+
16	K	LED-

2.2.1 Application Notes

Contrast Adjust

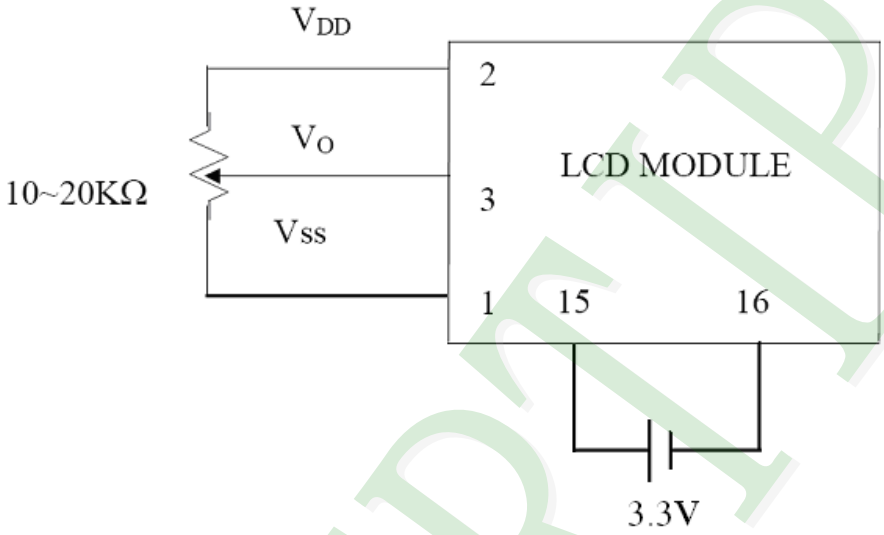

2.2.2 Refer Initial code

```
void initial()
{
    delay(40);
    write_com(0x01);
    delay(5);
    write_com(0x38);
    delay(5);
    write_com(0x0c);
    delay(5);
    write_com(0x06);
    delay(5);
}
```

2.3 Timing Characteristics

- Writing data from MPU to ST7066U

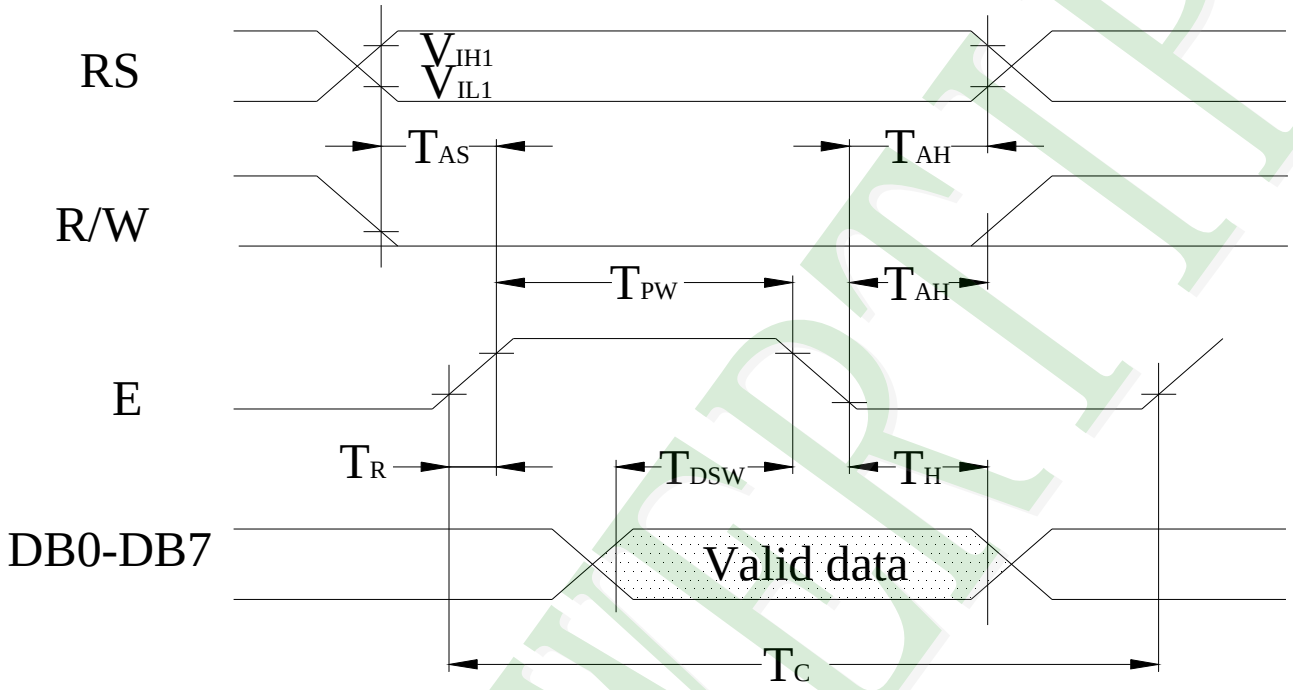

- Reading data from ST7066U to MPU

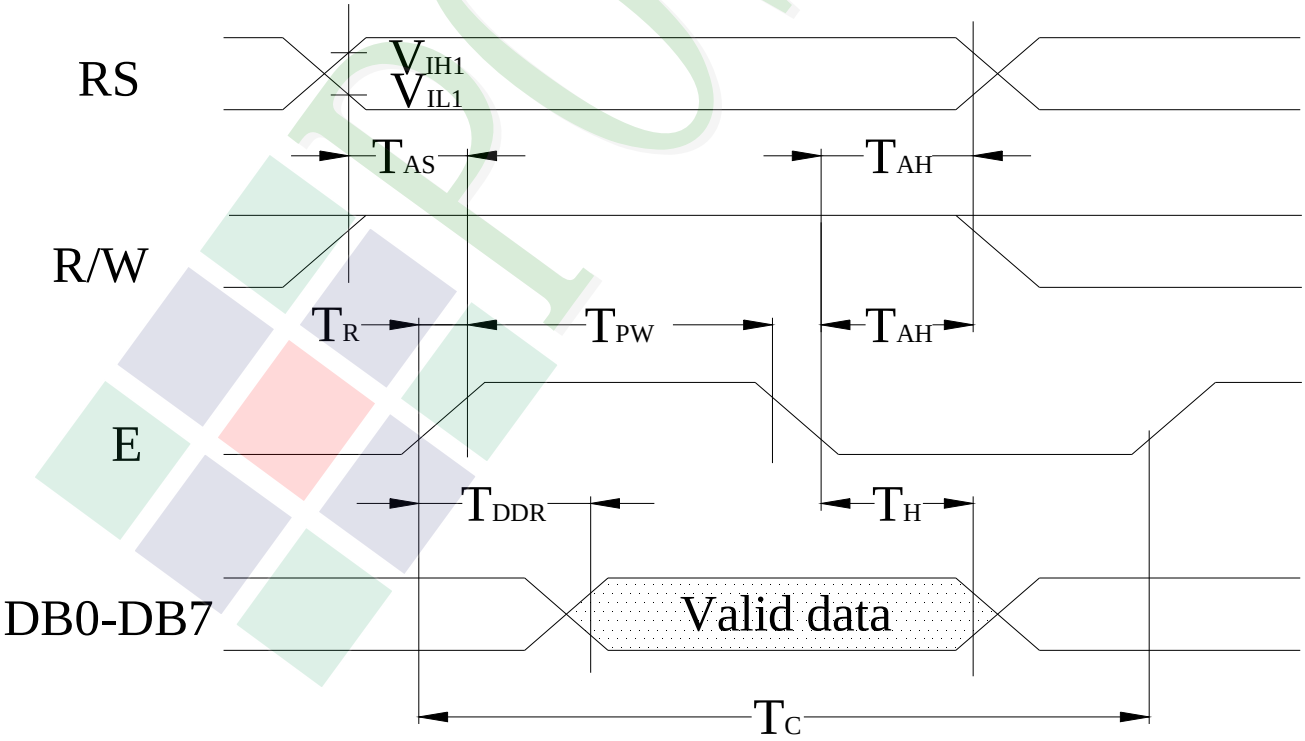

- Write Mode (Writing data from MPU to ST7066U)

(VDD = 5V,Ta=25°C)

Symbol	Characteristics	Test Condition	Min.	Typ.	Max.	Unit
T_C	Enable Cycle Time	Pin E	1200	-	-	ns
T_{PW}	Enable Pulse Width	Pin E	140	-	-	ns
T_R , T_F	Enable Rise / Fall Time	Pin E	-	-	25	ns
T_{AS}	Address Setup Time	Pins: RS , RW,E	0	-	-	ns
T_{AH}	Address Hold Time	Pins :RS,RW,E	10	-	-	ns
T_{DSW}	Data Setup Time	Pins:DB0~DB7	40	-	-	ns
T_H	Data Hold Time	Pins:DB0~DB7	10	-	-	ns

- Read Mode (Reading data from ST7066U to MPU)

(VDD = 5V,Ta=25°C)

Symbol	Characteristics	Test Condition	Min.	Typ.	Max.	Unit
T_C	Enable Cycle Time	Pin E	1200	-	-	ns
T_{PW}	Enable Pulse Width	Pin E	140	-	-	ns
T_R , T_F	Enable Rise / Fall Time	Pin E	-	-	25	ns
T_{AS}	Address Setup Time	Pins: RS , RW,E	0	-	-	ns
T_{AH}	Address Hold Time	Pins :RS,RW,E	10	-	-	ns
T_{DDR}	Data Setup Time	Pins:DB0~DB7	-	-	100	ns
T_H	Data Hold Time	Pins:DB0~DB7	10	-	-	ns

For 4-bit interface date, only four bus lines (DB4 to DB7) are used for transfer.

Example of busy flag check timing sequence

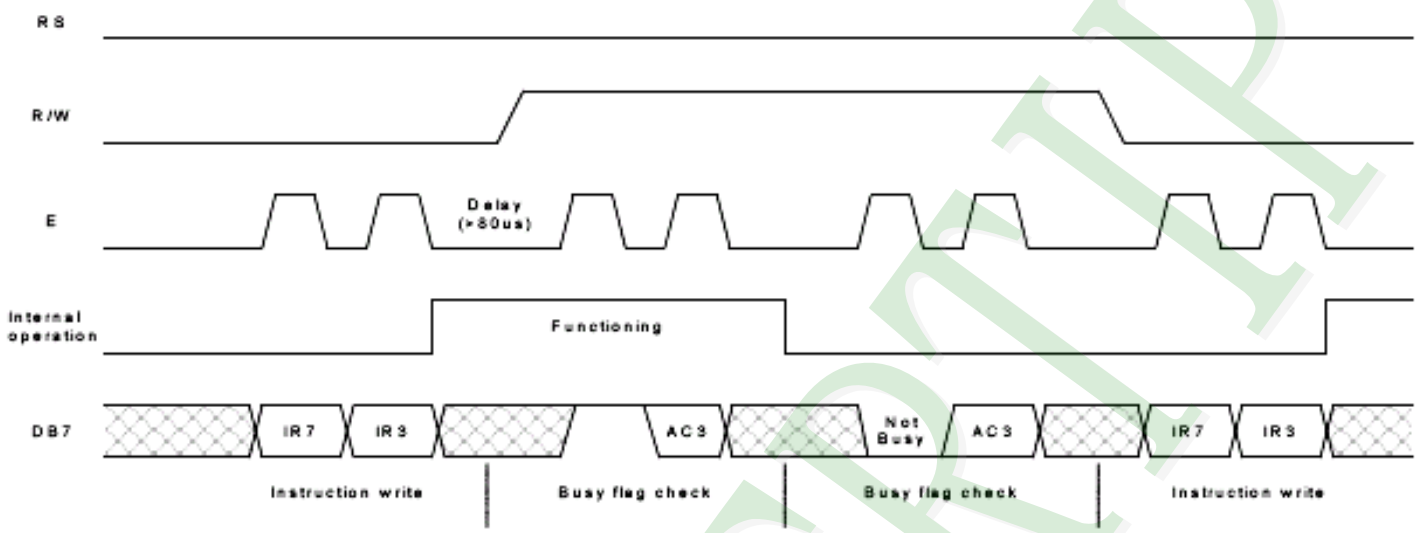

For 8-bit interface date, all eight bus lines (DB0 to DB7) are used .

Example of busy flag check timing sequence

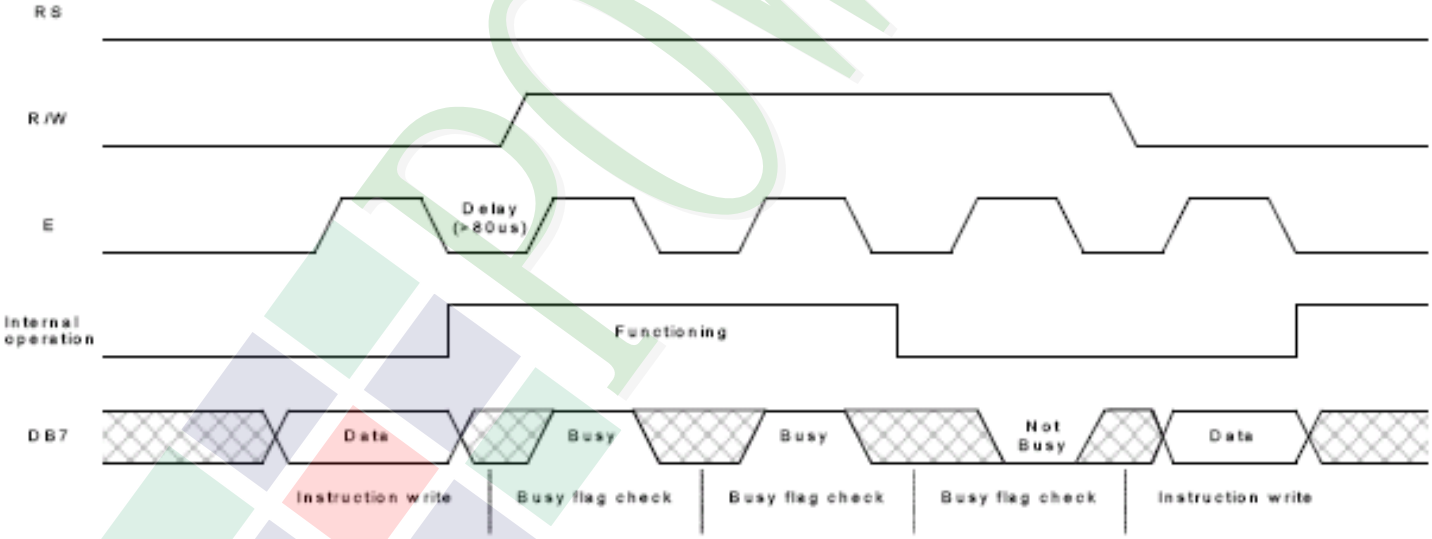

2.4 Display Command

Instructions	Instruction Code										Description	Description Time (270KHz)
	RS	R/W	DB7	DB6	DB5	DB4	DB3	DB2	DB1	DB0		
Clear Display	0	0	0	0	0	0	0	0	0	1	Write "20H" to DDRAM. and set DDRAM address to "00H" from AC.	1.52ms
Return Home	0	0	0	0	0	0	0	0	1	×	Set DDRAM address to "00H" from AC and return cursor to it's original position if shifted. The contents of DDRAM are not changed.	1.52ms
Entry Mode Set	0	0	0	0	0	0	0	1	I/D	S	Sets cursor move direction and specifies display shift. These operations are performed during data write and read .	37μs
Display ON/OFF	0	0	0	0	0	0	1	D	C	B	D=1 : entire display on C=1 : cursor on B=1 : cursor position on	37μs
Cursor or Display Shift	0	0	0	0	0	1	S/C	R/L	×	×	Set cursor moving and display shift control bit, and the the direction, without changing of DDRAM data.	37μs
Function Set	0	0	0	0	1	DL	N	F	×	×	DL: interface data is 8/4 bits NL: number of line is 2/1 F: font size is 5×11/5×8	37μs
Set CGRAM Address	0	0	0	1	AC5	AC4	AC3	AC2	AC1	AC0	Set CGRAM address in address counter.	37μs
Set DDRAM Address	0	0	1	AC6	AC5	AC4	AC3	AC2	AC1	AC0	Set DDRAM address in address counter.	37μs
Read Busy Flag and Address	0	1	BF	AC6	AC5	AC4	AC3	AC2	AC1	AC0	Whether during internal operation or not can be known by reading BF. The contents of address counter can also be read.	0μs

Write Data to RAM	1	0	D 7	D6	D5	D4	D3	D2	D1	D0	Write data into internal RAM (DDRAM/CGRAM).	37μs
Read Data from RAM	1	1	D 7	D6	D5	D4	D3	D2	D1	D0	Read data from internal RAM (DDRAM/CGRAM).	37μs

Note:

Be sure the ST7066U is not in the busy state (BF=0) before sending an instruction from the MPU to the ST7066.

If an instruction is sent without checking the busy flag , the time between the first instruction and next instruction will take much longer than the instruction time itself.

Before checking BF, be sure to wait at least 80us.. Do not keep “E” always “High” for checking BF

Refer to Instruction Table for the list of each instruction execution time .

2.5 Character Pattern

NO.7066-0A

b7-b4 / b3-b0	0000	0001	0010	0011	0100	0101	0110	0111	1000	1001	1010	1011	1100	1101	1110	1111
0000	CG RAM (1)															
0001	(2)															
0010	(3)															
0011	(4)															
0100	(5)															
0101	(6)															
0110	(7)															
0111	(8)															
1000	(1)															
1001	(2)															
1010	(3)															
1011	(4)															
1100	(5)															
1101	(6)															
1110	(7)															
1111	(8)															

2.6 JUMPER

J1,J3,J5

3. QUALITY ASSURANCE SYSTEM

3.1 Quality Assurance Flow Chart

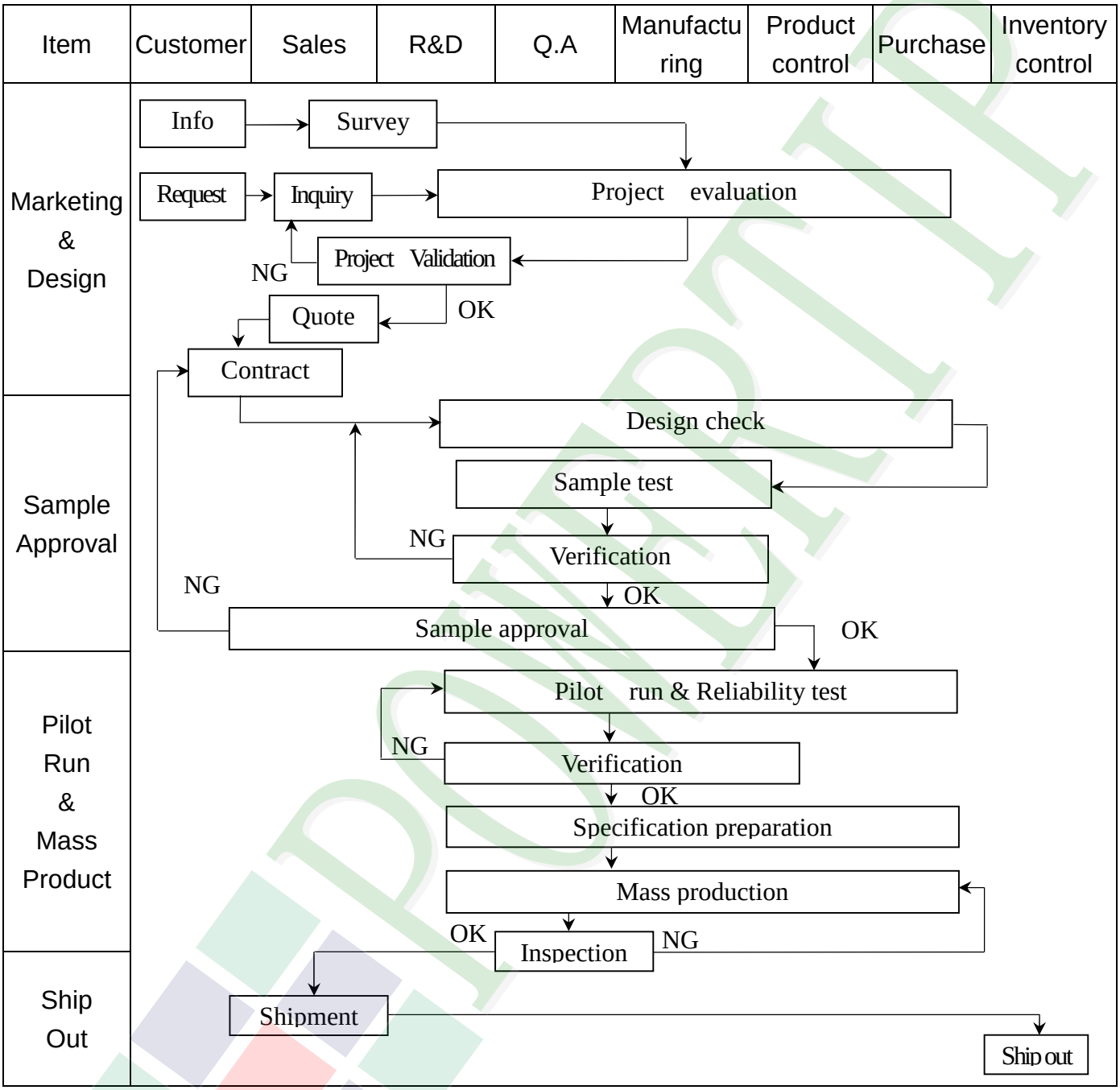

Item	Customer	Sales	R&D	Q.A	Manufacturing	Product control	Purchase	Inventory control
Sales Service	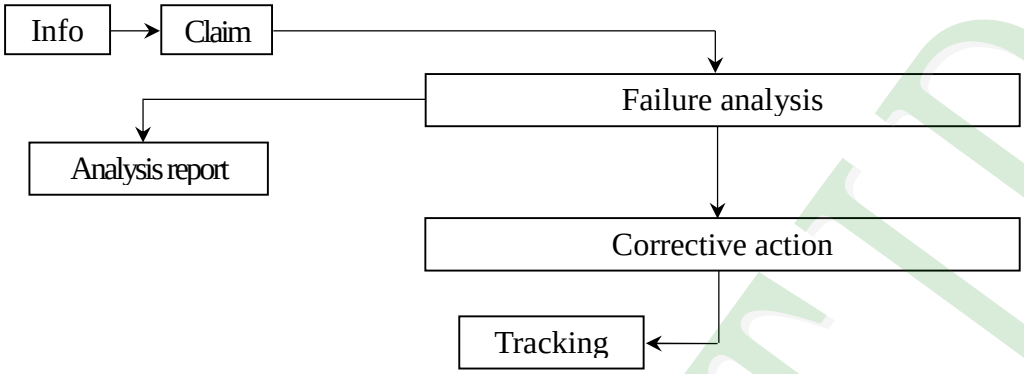							
Q.A Activity	1. ISO 9001 Maintenance Activities 2. Process improvement proposal 3. Equipment calibration 4. Education And Training Activities 5. Standardization Management							

3.2 Inspection Specification

◆Scope : The document shall be applied to LCD Module for Monotype and Color STN(Ver. B01).

◆Inspection Standard : MIL-STD-105E Table Normal Inspection Single Sampling Level Ⅱ .

◆Equipment : Gauge、MIL-STD、Powertip Tester、Sample

◆Defect Level : Major Defect AQL：0.4 ; Minor Defect：AQL： 1.5 .

◆OUT Going Defect Level : Sampling .

◆Manner of appearance test :

(1). The test be under 20W×2 fluorescent light ' and distance of view must be at 30 cm.

(2). Standard of inspection： (Unit：mm)

(3). The test direction is base on about around 45˚of vertical line. (Fig. 1)

(4). Definition of area . (Fig. 2)

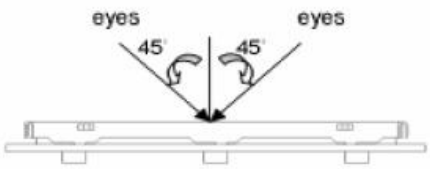

Fig.1

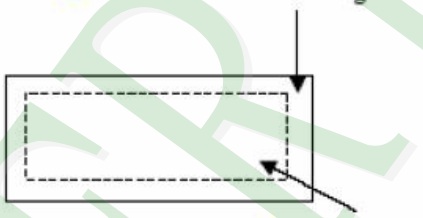

Fig. 2

◆ Specification:

NO	Item	Criterion	Level
01	Product condition	1.1 The part number is inconsistent with work order of Production.	Major
		1.2 Mixed production types.	Major
		1.3 Assembled in inverse direction.	Major
02	Quantity	2.1 The quantity is inconsistent with work order of production.	Major
03	Outline dimension	3.1 Product dimension and structure must conform to Structure diagram.	Major
04	Electrical Testing	4.1 Missing line character and icon.	Major
		4.2 No function or no display.	Major
		4.3 Output data is error.	Major
		4.4 LCD viewing angle defect.	Major
		4.5 Current consumption exceeds product specifications.	Major

◆Specification For Monotype and Color STN：

(Ver. B01)

<table>
<tr><th>NO</th><th>Item</th><th>Criterion</th><th>Level</th></tr>
<tr><td>05</td><td>Black or white dot、scratch、contamination

Round type
 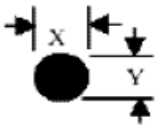

Φ=(x+y)/2

Line type
 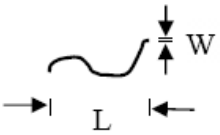
</td><td>5.1 Round type:
5.1.1 display only :
• White and black spots on display ≦ 0.30 mm , no more than 4 white or black spots present.
• Densely spaced : NO more than two spots or lines within 3 mm.

5.1.2 Non-display :
<table>
<tr><th rowspan="2">Dimension (diameter : Φ)</th><th colspan="2">Acceptance (Q'ty)</th></tr>
<tr><th>A area</th><th>B area</th></tr>
<tr><td>Φ ≦ 0.10</td><td>Accept no dense</td><td rowspan="4">Ignore</td></tr>
<tr><td>0.10 ＜ Φ ≦ 0.20</td><td>3</td></tr>
<tr><td>0.20 ＜ Φ ≦ 0.30</td><td>2</td></tr>
<tr><td>Total quantity</td><td>4</td></tr>
</table>
5.1.3 Line type:
<table>
<tr><th colspan="2">Dimension</th><th colspan="2">Acceptance (Q'ty)</th></tr>
<tr><th>Length (L)</th><th>Width (W)</th><th>A area</th><th>B area</th></tr>
<tr><td>---</td><td>W ≦ 0.03</td><td>Accept no dense</td><td rowspan="3">Ignore</td></tr>
<tr><td>L ≦ 3.0</td><td>0.03 ＜ W ≦ 0.05</td><td rowspan="2">4</td></tr>
<tr><td>L ≦ 2.5</td><td>0.05 ＜W ≦ 0.075</td></tr>
<tr><td>---</td><td>W ＞0.075</td><td colspan="2">As round type</td></tr>
</table></td><td>Minor</td></tr>
<tr><td>06</td><td>Polarizer Bubble</td><td>
<table>
<tr><th rowspan="2">Dimension (diameter : Φ)</th><th colspan="2">Acceptance (Q'ty)</th></tr>
<tr><th>A area</th><th>B area</th></tr>
<tr><td>Φ ≦ 0.20</td><td>Accept no dense</td><td rowspan="5">Ignore</td></tr>
<tr><td>0.20 ＜Φ ≦ 0.50</td><td>3</td></tr>
<tr><td>0.50 ＜Φ ≦ 1.00</td><td>2</td></tr>
<tr><td>Φ ＞ 1.00</td><td>0</td></tr>
<tr><td>Total quantity</td><td>4</td></tr>
</table></td><td>Minor</td></tr>
</table>

◆Specification For Monotype and Color STN：

(Ver. B01)

NO	Item	Criterion	Level
07	The crack of glass	Symbols： X : The length of crack　　Y : The width of crack. Z : The thickness of crack　　W : terminal length t : The thickness of glass　　a : LCD side length 7.1 General glass chip： 7.1.1 Chip on panel surface and crack between panels: 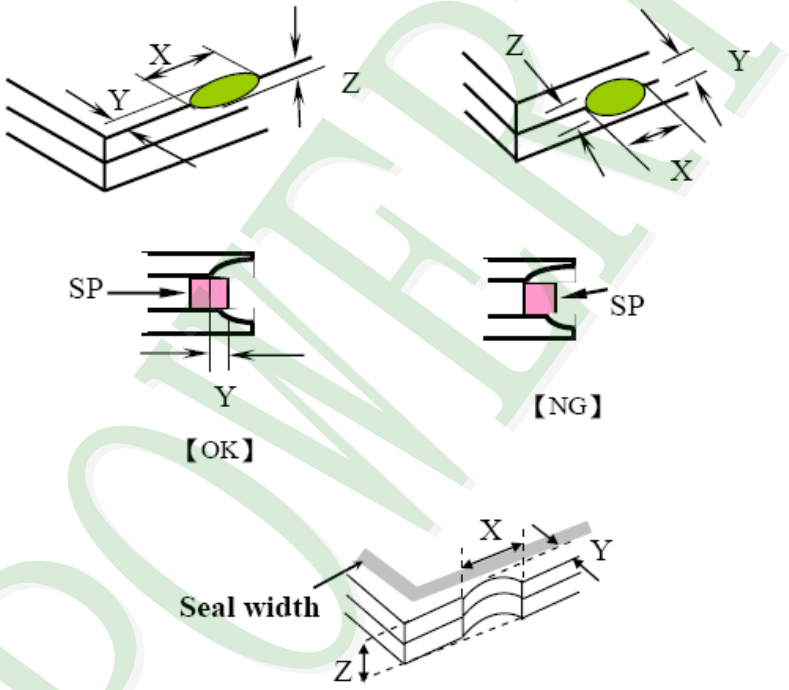 X : ≦ a ; Y : Crack can't enter viewing area ; Z : ≦1/2 t X : ≦ a ; Y : Crack can't exceed the half of SP width. ; Z : 1/2 t < Z ≦2 t	Minor

◆Specification For Monotype and Color STN：

(Ver. B01)

NO	Item	Criterion	Level
07	The crack of glass	Symbols： X : The length of crack　　Y : The width of crack. Z : The thickness of crack　　W : terminal length t : The thickness of glass　　a : LCD side length 7.1.2 Corner crack：	Minor

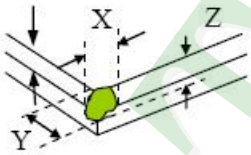

X	Y	Z
≦1/5 a	Crack can't enter viewing area	Z ≦ 1/2 t
≦1/5 a	Crack can't exceed the half of SP width.	1/2 t < Z ≦ 2 t

7.2 Protrusion over terminal：

7.2.1 Chip on electrode pad：

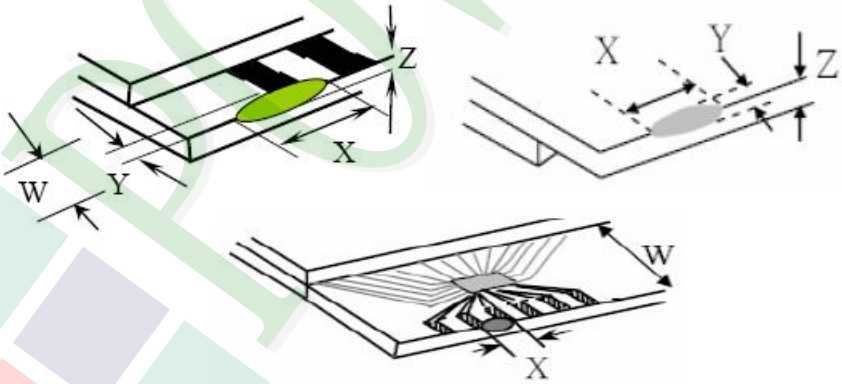

	X	Y	Z
Front	≦ a	≦ 1/2 W	≦ t
Back	Neglect		

◆Specification For Monotype and Color STN：

(Ver. B01)

NO	Item	Criterion	Level
07	The crack of glass	Symbols： X : The length of crack　　Y : The width of crack. Z : The thickness of crack　　W : terminal length t : The thickness of glass　　a : LCD side length 7.2.2 Non-conductive portion： 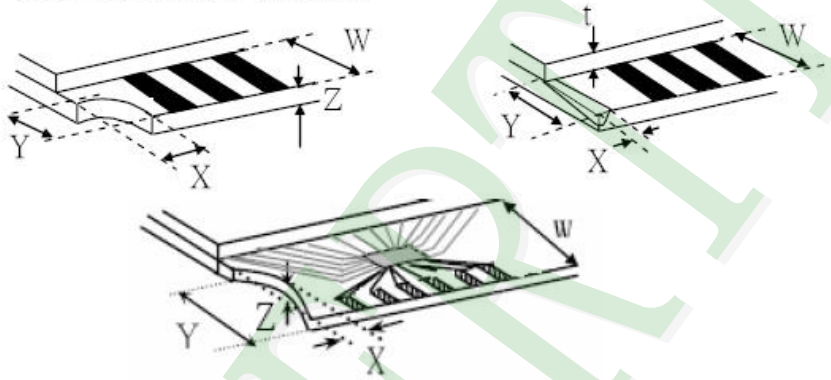 X : ≦1/3 a　Y : ≦W　Z : ≦t ⊙ If the chipped area touches the ITO terminal, over 2/3 of the ITO must remain and be inspected according to electrode terminal specifications. 7.2.3 Glass remain： 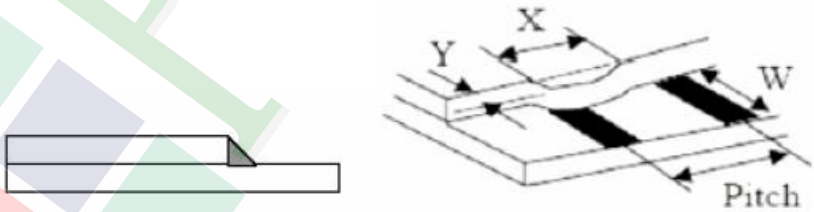 X : ≦ a　Y : ≦ 1/3 W　Z : ≦ t	Minor

◆Specification For Monotype and Color STN：

(Ver. B01)

NO	Item	Criterion	Level
08	Backlight elements	8. 1 Backlight can't work normally.	Major
		8. 2 Backlight doesn't light or color is wrong.	Major
		8. 3 Illumination source flickers when lit.	Major
09	General appearance	9. 1 Pin type must match type in specification sheet.	Major
		9. 2 No short circuits in components on PCB or FPC.	Major
		9. 3 Product packaging must the same as specified on packaging specification sheet.	Minor
		9. 4 The folding and peeled off in polarizer are not acceptable.	Minor
		9. 5 The PCB or FPC between B/L assembled distance (PCB or FPC) is ≦1. 5 mm.	Minor

4. RELIABILITY TEST

4.1 Reliability Test Condition (Ver.B01)

<table>
<tr><th>NO.</th><th>TEST ITEM</th><th>TEST CONDITION</th></tr>
<tr><td>1</td><td>High Temperature Storage Test</td><td>Keep in 80 ±2℃ 96 hrs
Surrounding temperature, then storage at normal condition 4hrs.</td></tr>
<tr><td>2</td><td>Low Temperature Storage Test</td><td>Keep in -30 ±2℃ 96 hrs
Surrounding temperature, then storage at normal condition 4hrs.</td></tr>
<tr><td>3</td><td>High Temperature / High Humidity Storage Test</td><td>Keep in +60 ℃ / 90% R.H duration for 96 hrs
Surrounding temperature, then storage at normal condition 4hrs.
(Excluding the polarizer)</td></tr>
<tr><td>4</td><td>Temperature Cycling Storage Test</td><td>-30℃→ +25℃ → 80℃ → +25℃
(30mins) (5mins) (30mins) (5mins)
10 Cycle
Surrounding temperature, then storage at normal condition 4hrs.</td></tr>
<tr><td rowspan="2">5</td><td rowspan="2">ESD Test</td><td>Air Discharge:
Apply 2 KV with 5 times Discharge for each polarity +/-
Contact Discharge:
Apply 250 V with 5 times discharge for each polarity +/-</td></tr>
<tr><td>1. Temperature ambiance : 15℃～35℃
2. Humidity relative : 30%～60%
3. Energy Storage Capacitance(Cs+Cd) : 150pF±10%
4. Discharge Resistance(Rd) : 330Ω±10%
5. Discharge, mode of operation :
Single Discharge (time between successive discharges at least 1 sec) (Tolerance if the output voltage indication : ±5%)</td></tr>
<tr><td>6</td><td>Vibration Test (Packaged)</td><td>1. Sine wave 10～55 Hz frequency (1 min/sweep)
2. The amplitude of vibration :1.5 mm
3. Each direction (X、Y、Z) duration for 2 Hrs</td></tr>
<tr><td>7</td><td>Drop Test (Packaged)</td><td><table><tr><th>Packing Weight (Kg)</th><th>Drop Height (cm)</th></tr><tr><td>0 ~ 45.4</td><td>122</td></tr><tr><td>45.4 ~ 90.8</td><td>76</td></tr><tr><td>90.8 ~ 454</td><td>61</td></tr><tr><td>Over 454</td><td>46</td></tr></table>Drop Direction :※1 corner / 3 edges / 6 sides each 1time</td></tr>
</table>

5. PRECAUTION RELATING PRODUCT HANDLING

5.1 SAFETY

5.1.1 If the LCD panel breaks , be careful not to get the liquid crystal to touch your skin.

5.1.2 If the liquid crystal touches your skin or clothes , please wash it off immediately by using soap and water.

5.2 HANDLING

5.2.1 Avoid any strong mechanical shock which can break the glass.

5.2.2 Avoid static electricity which can damage the CMOS LSI—When working with the module , be sure to ground your body and any electrical equipment you may be using.

5.2.3 Do not remove the panel or frame from the module.

5.2.4 The polarizing plate of the display is very fragile. So , please handle it very carefully ,do not touch , push or rub the exposed polarizing with anything harder than an HB pencil lead (glass , tweezers , etc.)

5.2.5 Do not wipe the polarizing plate with a dry cloth , as it may easily scratch the surface of plate.

5.2.6 Do not touch the display area with bare hands , this will stain the display area.

5.2.7 Do not use ketonics solvent & aromatic solvent. Use with a soft cloth soaked with a cleaning naphtha solvent.

5.2.8 To control temperature and time of soldering is 320±10℃and 3-5 sec.

5.2.9 To avoid liquid (include organic solvent) stained on LCM .

5.3 STORAGE

5.3.1 Store the panel or module in a dark place where the temperature is 25℃ ±5℃ and the humidity is below 65% RH.

5.3.2 Do not place the module near organics solvents or corrosive gases.

5.3.3 Do not crush , shake , or jolt the module.

5.4 TERMS OF WARRANTY

5.4.1 Applicable warrant period

The period is within thirteen months since the date of shipping out under normal using and storage conditions.

5.4.2 Unaccepted responsibility

This product has been manufactured to your company's specification as a part for use in your company's general electronic products. It is guaranteed to perform according to delivery specifications. For any other use apart from general electronic equipment , we cannot take responsibility if the product is used in nuclear power control equipment , aerospace equipment , fire and security systems or any other applications in which there is a direct risk to human life and where extremely high levels of reliability are required.

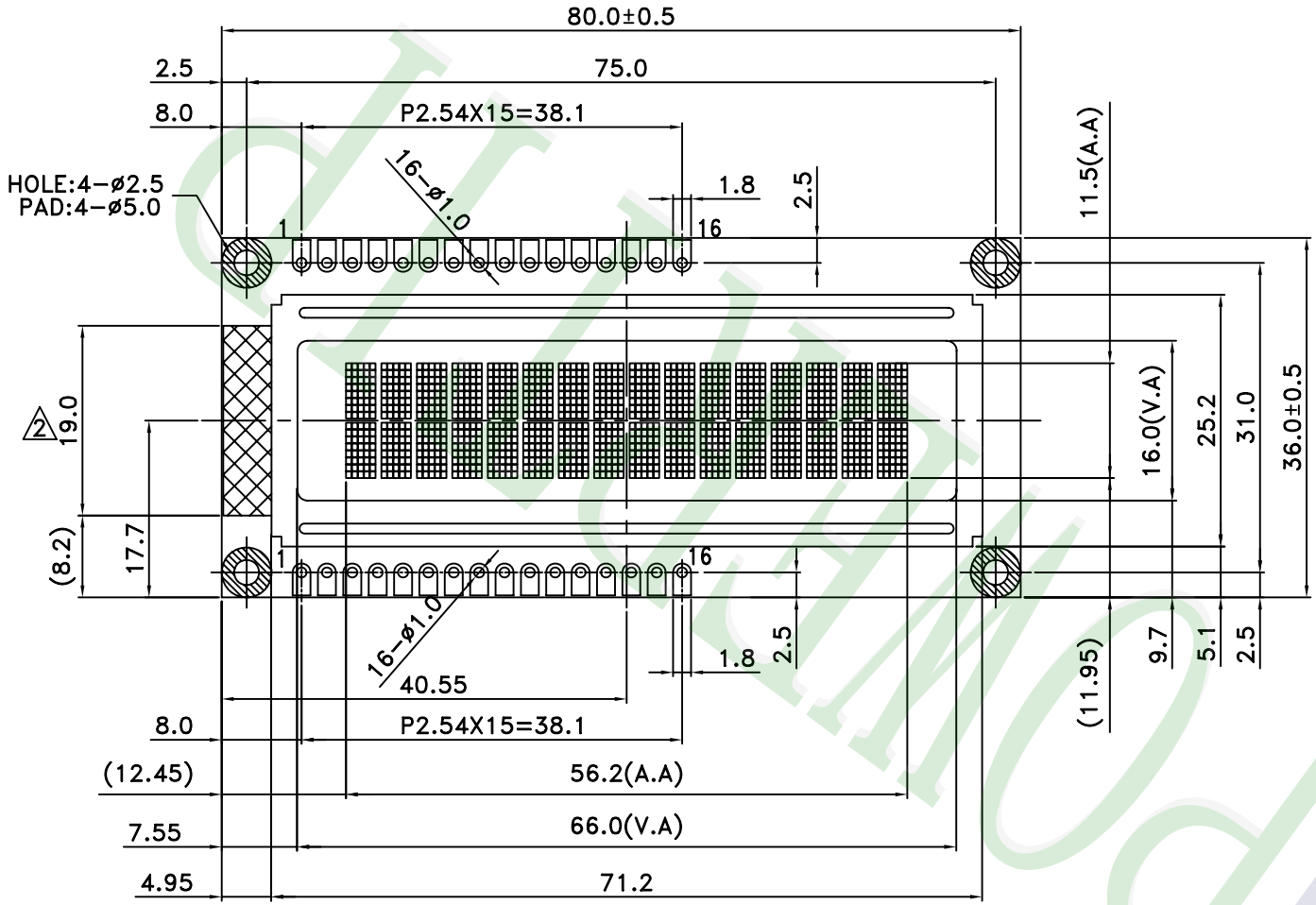

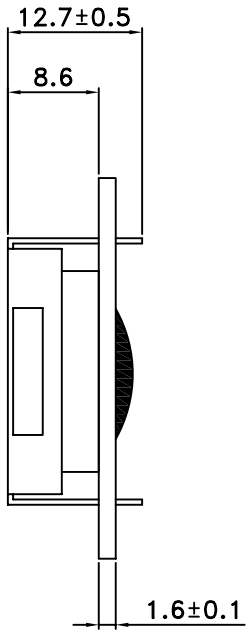

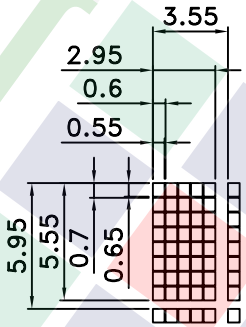

SCALE: 2X

NOTES:

1. LCD TYPE: PBT
2. LCD DISPLAY: Negative/Transmissive
3. VIEW DIRECTION: 6 O'CLOCK
4. Top: −20~70°C Tst:−30~80°C
5. The tolerance unless classified ±0.3mm

REV	REV BY	REVISER	DATE
007			
006			
005			
004			
003			
002	Modify BL	Sally	2014/05/08
001	NEW DRAWING	Sally	2014/05/06

PART NO: NPC1602WRP-GWA-I

DRAWING NAME : JLMD-NPC1602WRP-GWA-I

TITLE: LCD Module Drawing

久正光電股份有限公司
POWERTIP TECHNOLOGY CORPORATION

Design	Sally	(3)	Surface
Check	Terry	Unit	MM
Approve	Ryan	Scale	1:1
		Page	1/1
		Material	
		Thickness	
		Quantity	

公差精度等級 最小長度 (mm)	精級
1 ~ 4	-
4 ~ 16	-
16 ~ 63	-
63 ~ 250	-
250 ~ 1000	-

PT-A-054-01

Ver.001

Documents NO.	JPKG-NPC1602WRP-GWA-I

LCM包裝規格書
LCM Packaging Specifications

Approve	Check	Contact
Ryan	Terry	Sally

1.包裝材料規格表 (Packaging Material) : (per carton)

No.	Item	Model	Dimensions (mm)	1Pcs Weight	Quantity	Total Weight
1	成品 (LCM)	NPC1602WRP-GWA-I	80.0 X 36.0 X 12.7	0.0328	468	15.444
2	靜電袋(1)Antistatic Bag	BAG100100ARABA	100 X 100	0.0011	468	0.5148
3	A1-1隔板(3)A1-1 Partition	BX29500047BZBA	295 X 47 X 3	0.0078	168	1.3104
4	B1-1隔板(4)B1-1 Partition	BX24500047BZBA	245 X 47 X 3	0.0065	48	0.312
5	氣泡紙(5)Bubble Sheet	BAG280240BWABA	280 X 240	0.006	24	0.144
6	C1內盒(6)Product Box	BX31025555AABA	310 X 255 X 55	0.13	12	1.56
7	外紙箱(7)Carton	BX52732536CCBA	527 X 325 X 360	0.83	1	0.83
8						
9						

2.一 整箱總重量 (Total LCD Weight in carton) : 20.12 Kg±10%

3.單箱數量規格表 (Packaging Specifications and Quantity) :

(1)Quantity Of Spacer : A1-1隔板 X 14 , B1-1隔板 X 4

(2)Total LCM quantity in carton : quantity per box 39 x no of boxes 12 = 468

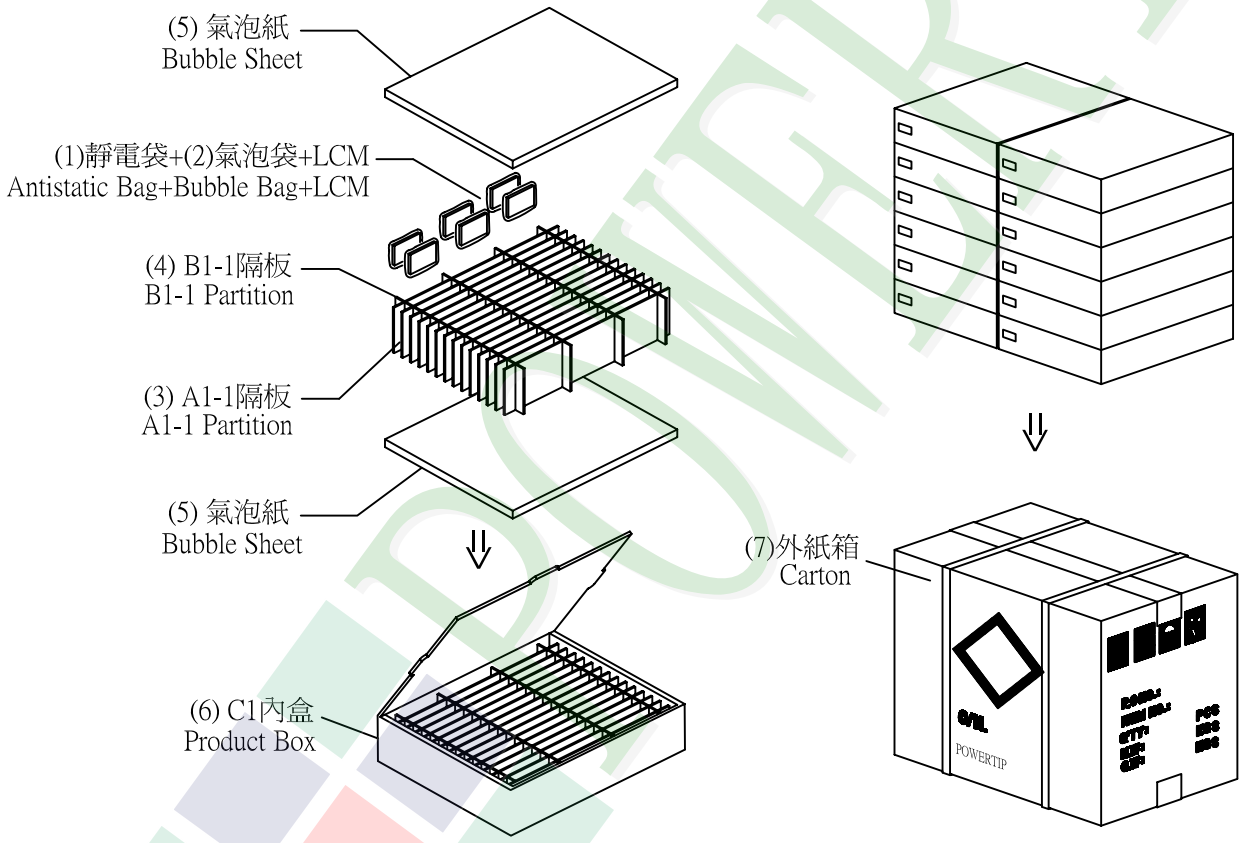

特 記 事 項 (REMARK)

4. Label Specifications :
依廠內標準作業

5. LCM排放示意圖(前後間隔不放置):
5. LCM placed as figure showing:
(First and last slot should be empty)

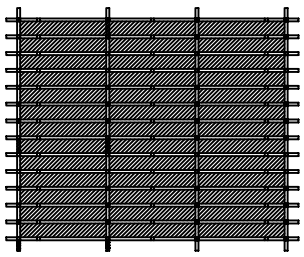

模組(LCM) X 1pcs.