BOLYMIN

BC4002A

Feature

1. COB with metal frame
2. 5x7 dots with cursor
3. Built-in controller ST7066 or equivalent
4. + 5V single power supply
5. 1/16 duty cycle
6. LED B/L pins: 15/16, or A/K, or 1/2
7. Option: LED arrayB/L, EL B/L
8. Option: +3V single power supply
9. Option: Negative Voltage

Mechanical Data

Item	Standard Value	Unit
Module Dimension	182.0 x 33.5	mm
Viewing Area	154.4 x 16.5	mm
Dot Size	0.6 x 0.65	mm
Character Size	3.2 x 5.55	mm

Pin Assignment

Pin	Symbol	Function
1	Vss	GND
2	Vdd	+5V(+3V option)
3	Vo	Contrast adjustment
4	RS	H/L register select signal
5	R/W	H/L read/write signal
6	E	H --> L enable signal
7~14	DB0~7	H/L data bus line
15	A/Vee	Power Supply for B/L(+)/ Negative voltage output
16	K	Power supply for B/L (GND)

Electronic Characteristics

Item	Symbol	Condition	Typical Value	Unit
Input Voltage	Vdd	Vdd = +5V	5.0	V
Supply Current	Idd	Vdd = +5V	1.3	mA
LCD Driving Voltage	Vdd-Vo	25°C	4.5	V
LED Forward Voltage	Vf	25°C	4.2	V
LED Forward Current	If	25°C	280	mA
EL Power Voltage	Vel	Vel=110Vac/400Hz		V
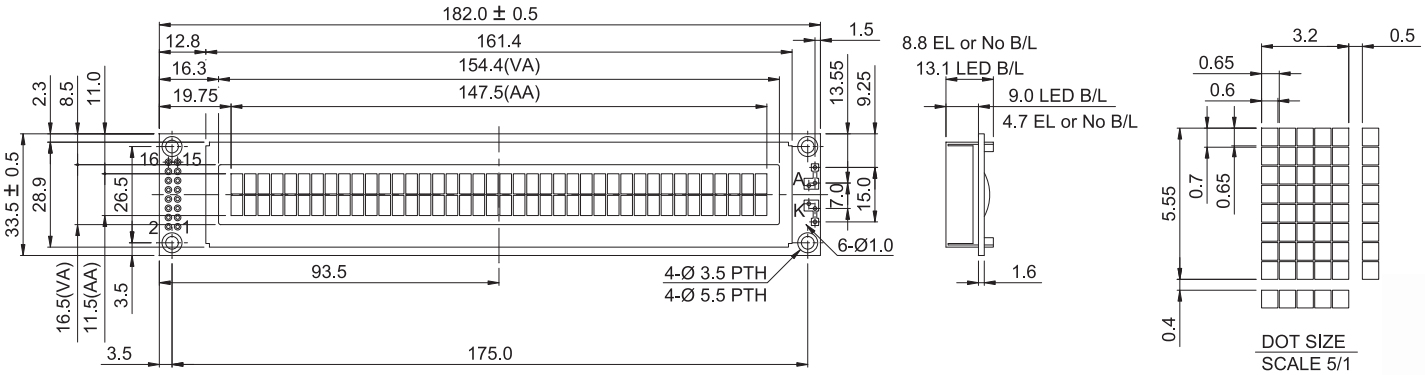
Dimension