NO.	REVISED BY	CONTENTS

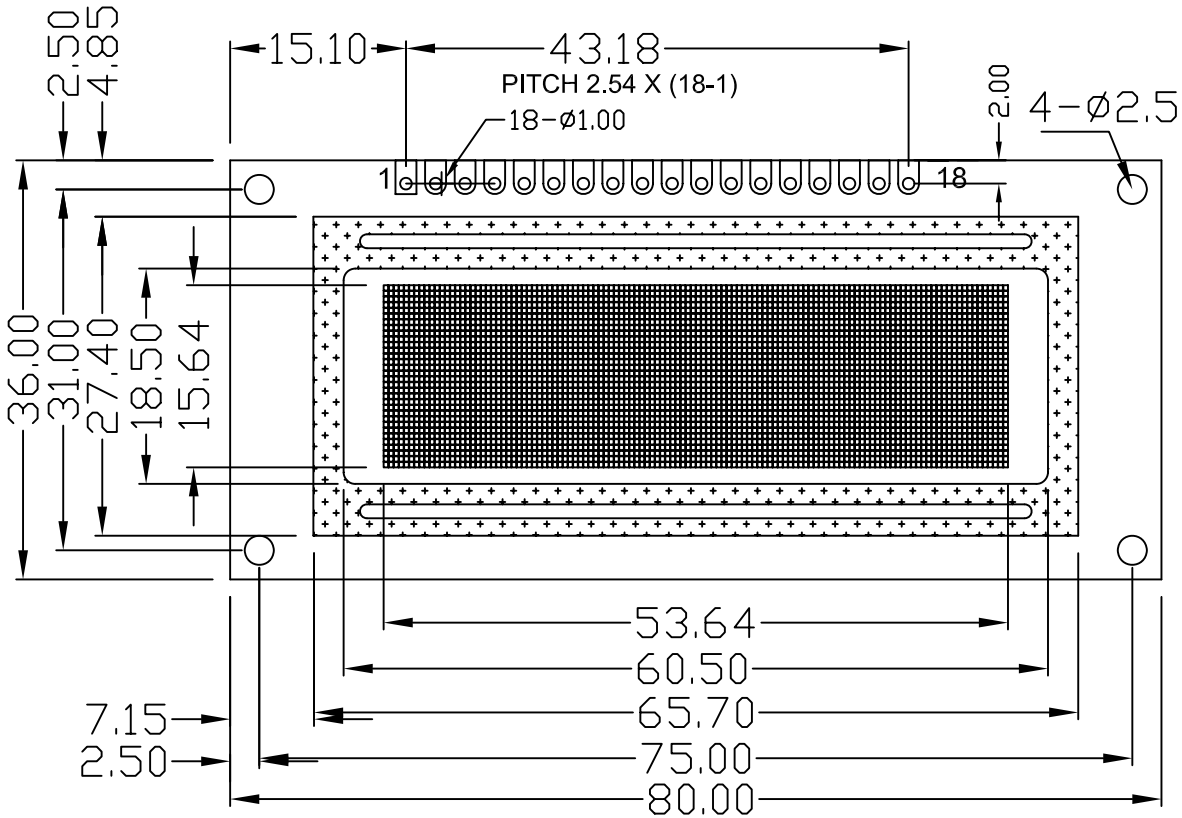

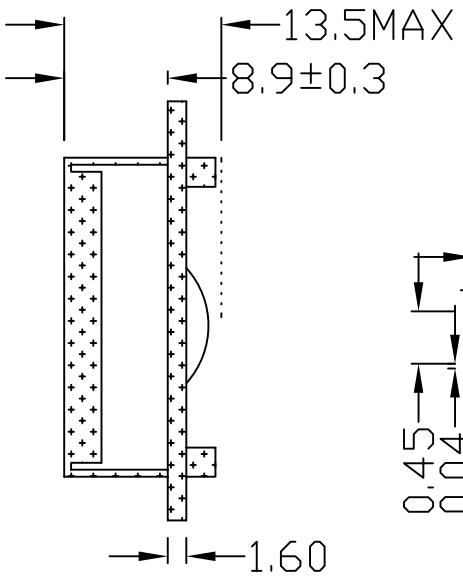

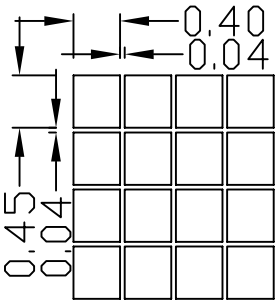

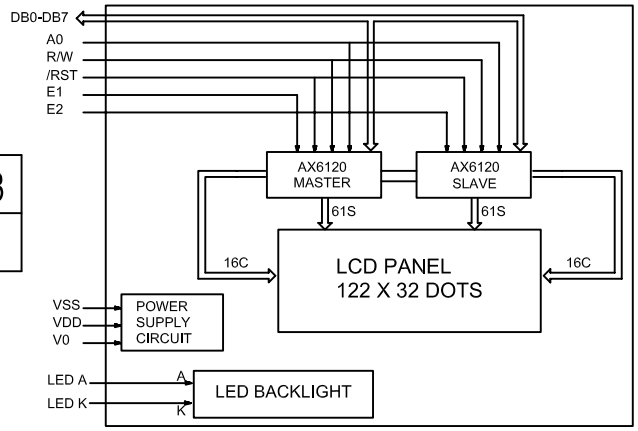

1	2	3	4	5	6	7	8	9	10	11	12	13	14	15	16	17	18
VSS	VDD	V0	A0	E1	E2	R/W	DB0	DB1	DB2	DB3	DB4	DB5	DB6	DB7	/RST	A	K

NOTES:
1.LCD TYPE: STN, YELLOW-GREEN
2.VIEWING ANGLE: 6:00 CLOCK
3.POLARIZER MODE: TRANSFLECTIVE/POSITIVE
4.OPERATING TEMP: -20° C--+70° C
5.STORAGE TEMP: -30° C--+80° C
6.POWER SUPPLY: +5.0V,VLCD: 4.8V
7.BACKLIGHT:YELLOW-GREEN LED, 5.0V
8.LCD DRIVE MODE: 1/32 DUTY,1/6 BIAS
9.LCD DRIVER: AX6120
10.UNMARKED TOLERANCE: ± 0.2mm

SHENZHEN LONDA TECH CO.,LTD
3/F, WEST BLOCK, NO. 2 BUILDING, BaGua 2nd Road, ShenZhen, China

VERSION		DRAWN BY: Even	TITLE: LMG122322A	
DATE		APPROVED BY:	UNMARKED TOLERANCE: ±0.2	UNIT: mm

WEBSITE:WWW.LONDATECH.COM EMAIL:SALES@LONDATECH.COM
TEL:86-755-82429036 82420578 FAX:86-755-82448691