4611110008831

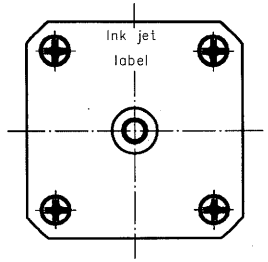

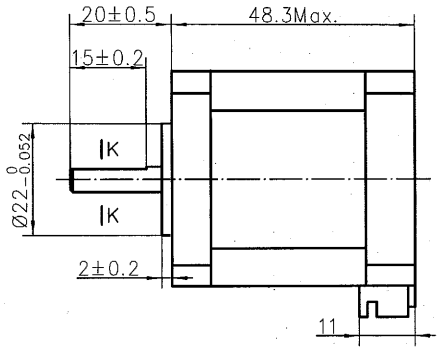

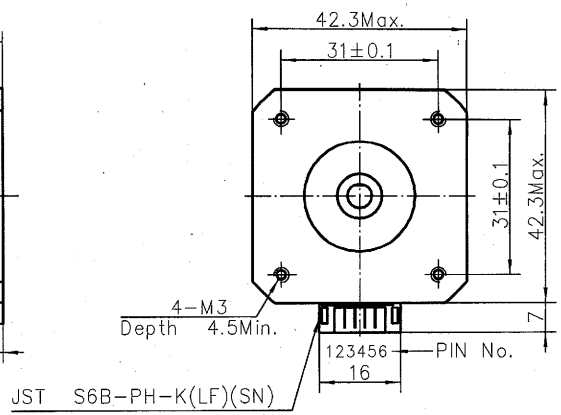

接线图

Wiring Diagram

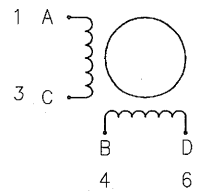

励磁顺序vs.旋转方向

Exciting Sequence vs. Direction of Rotation

STEP	A	B	C	D
1	+	+	−	−
2	−	+	+	−
3	−	−	+	+
4	+	−	−	+

CCW

CW

从安装面看为顺时针方向

Clockwise view from mouting side

K-K(2:1)

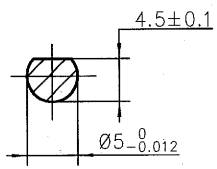

规格 Specifications

1. 相数 Number of Phase	2
2. 步距角 Step Angle	1.8°
3. 额定电压 Rated Voltage	2.4 V DC
4. 额定电流 Rated Current	1.5 A
5. 保持力矩 Holding Torque	420mN.m MIN(Two phase on/rated current)
6. 相电阻 Phase Resistance	1.6 ohm±10%(20°C)
7. 相电感 Phase Inductance	2.85 mH±20%(1kHz 1V rms)
8. 转子惯量 Rotor Inertia	82g.cm^2
9. 电机重量 Motor Weight	0.36kg
10. 绝缘等级 Insulation Class	B(130°C)

铭牌 Label Detail

MOONS' STEPPING MOTOR
TYPE 17HD6002-03N
XXXXXXXX YY/MM/DD

Work Order 加工单号

Date Format 日期格式

保密

REV.	版本记录 REVISION RECORD	DATE
A	原始版本 Original revision	2011.04.20

Unit: mm

第一角画法 FIRST ANGLE METHOD

未注线性与角度尺寸公差 Tolerances for linear and angular dimensions without individual tolerance indications GB/T 1804-m eqv ISO 2768-1:m

未注形状与位置尺寸公差 Geometrical tolerance for features without individual tolerance indications GB/T 1184-K eqv ISO 2768-2:K

UNLESS OTHERWISE SPECIFIED

NAMES	SIGNATURE	DATE
批准 Approve		4.21
标准化 Standard		4.21
工艺 Technology		4.21
审核 Check		4.21
设计 Design	吴勇	2011.04.20

MOONS' Hybrid Stepping Motor

Shanghai Moons' Electric Co., Ltd.

This ducument is released for information only. Its reproduction in whole or in part or its dissemination to third parties is prohibited. All trademarks and registered trademarks appearing on this document are the property of their respective owners.

Type: 17HD6002-03N | Rev.A | SCALE 1:1 | Sheet 1 of 1