MOTOROLA

10-LINE-TO-4-LINE AND 8-LINE-TO-3-LINE PRIORITY ENCODERS

SN54/74LS147
SN54/74LS148
SN54/74LS748

10-LINE-TO-4-LINE AND 8-LINE-TO-3-LINE PRIORITY ENCODERS

LOW POWER SCHOTTKY

The SN54/74LS147 and the SN54/74LS148 are Priority Encoders. They provide priority decoding of the inputs to ensure that only the highest order data line is encoded. Both devices have data inputs and outputs which are active at the low logic level.

The LS147 encodes nine data lines to four-line (8-4-2-1) BCD. The implied decimal zero condition does not require an input condition because zero is encoded when all nine data lines are at a high logic level.

The LS148 encodes eight data lines to three-line (4-2-1) binary (octal). By providing cascading circuitry (Enable Input EI and Enable Output EO) octal expansion is allowed without needing external circuitry.

The SN54/74LS748 is a proprietary Motorola part incorporating a built-in deglitcher network which minimizes glitches on the GS output. The glitch occurs on the negative going transition of the EI input when data inputs 0–7 are at logical ones.

The only dc parameter differences between the LS148 and the LS748 are that (1) Pin 10 (input 0) has a fan-in of 2 on the LS748 versus a fan-in of 1 on the LS148; (2) Pins 1, 2, 3, 4, 11, 12 and 13 (inputs 1, 2, 3, 4, 5, 6, 7) have a fan-in of 3 on the LS748 versus a fan-in of 2 on the LS148.

The only ac difference is that t_{PHL} from EI to EO is changed from 40 to 45 ns.

SN54/74LS147
(TOP VIEW)

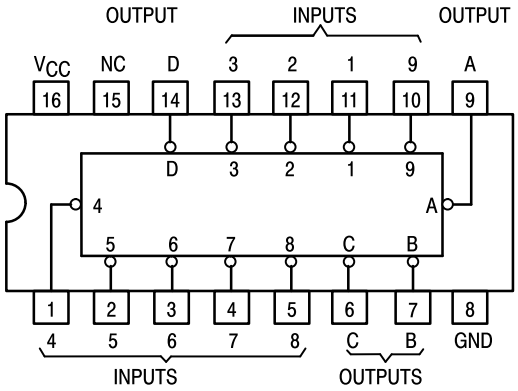

SN54/74LS148
SN54/74LS748
(TOP VIEW)

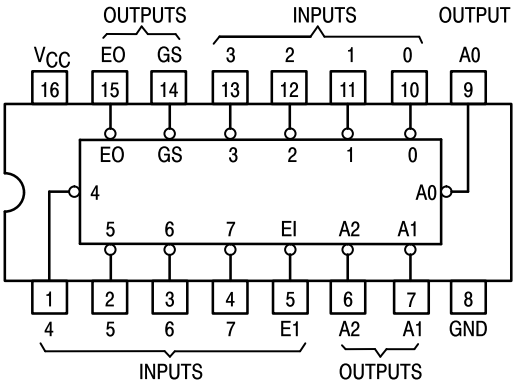

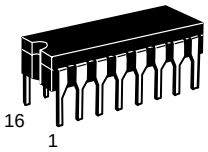

J SUFFIX
CERAMIC
CASE 620-09

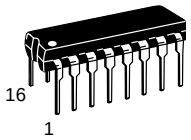

N SUFFIX
PLASTIC
CASE 648-08

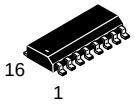

D SUFFIX
SOIC
CASE 751B-03

ORDERING INFORMATION

SN54LSXXXJ	Ceramic
SN74LSXXXN	Plastic
SN74LSXXXD	SOIC

SN54/74LS147
FUNCTION TABLE

INPUTS									OUTPUTS			
1	2	3	4	5	6	7	8	9	D	C	B	A
H	H	H	H	H	H	H	H	H	H	H	H	H
X	X	X	X	X	X	X	X	L	L	H	H	L
X	X	X	X	X	X	X	L	H	L	H	H	H
X	X	X	X	X	X	L	H	H	H	L	L	L
X	X	X	X	X	L	H	H	H	H	L	L	H
X	X	X	X	L	H	H	H	H	H	L	H	L
X	X	X	L	H	H	H	H	H	H	L	H	H
X	X	L	H	H	H	H	H	H	H	H	L	L
X	L	H	H	H	H	H	H	H	H	H	L	H
L	H	H	H	H	H	H	H	H	H	H	H	L

H = HIGH Logic Level, L = LOW Logic Level, X = Irrelevant

SN54/74LS148
SN54/74LS748
FUNCTION TABLE

INPUTS									OUTPUTS				
EI	0	1	2	3	4	5	6	7	A2	A1	A0	GS	EO
H	X	X	X	X	X	X	X	X	H	H	H	H	H
L	H	H	H	H	H	H	H	H	H	H	H	H	L
L	X	X	X	X	X	X	X	L	L	L	L	L	H
L	X	X	X	X	X	X	L	H	L	L	H	L	H
L	X	X	X	X	X	L	H	H	L	H	L	L	H
L	X	X	X	X	L	H	H	H	L	H	H	L	H
L	X	X	X	L	H	H	H	H	H	L	L	L	H
L	X	X	L	H	H	H	H	H	H	L	H	L	H
L	X	L	H	H	H	H	H	H	H	H	L	L	H
L	L	H	H	H	H	H	H	H	H	H	H	L	H

FUNCTIONAL BLOCK DIAGRAMS

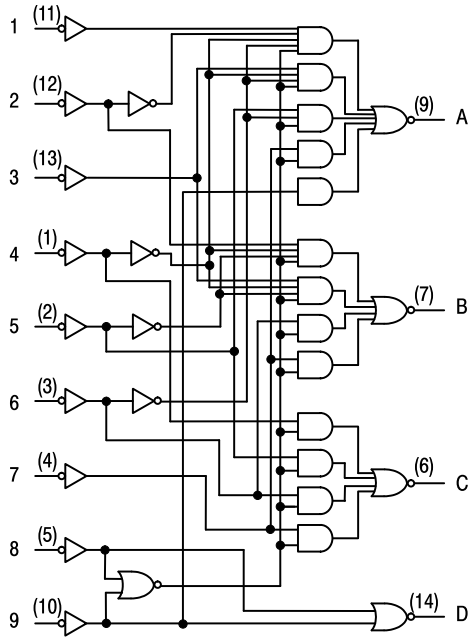

SN54/74LS147

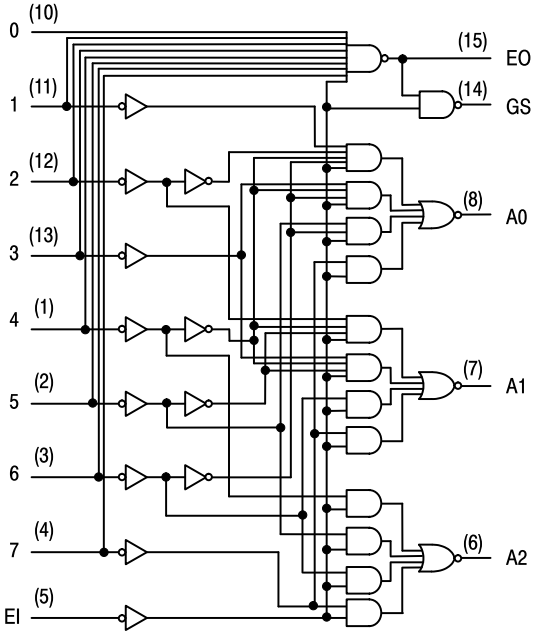

SN54/74LS148

FUNCTIONAL BLOCK DIAGRAMS (continued)

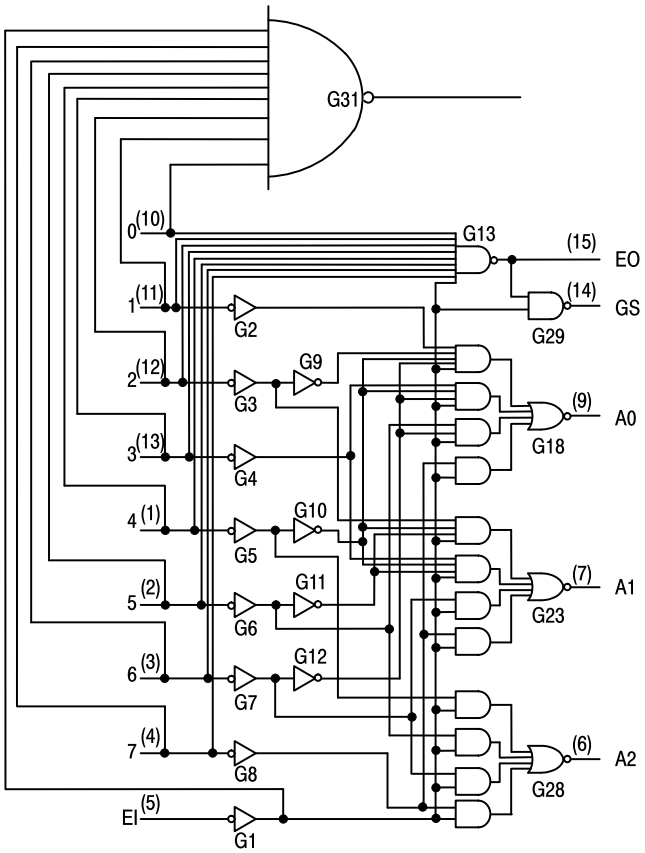

SN54/74LS748

GUARANTEED OPERATING RANGES

Symbol	Parameter		Min	Typ	Max	Unit
V_{CC}	Supply Voltage	54 74	4.5 4.75	5.0 5.0	5.5 5.25	V
T_A	Operating Ambient Temperature Range	54 74	–55 0	25 25	125 70	°C
I_{OH}	Output Current — High	54, 74			–0.4	mA
I_{OL}	Output Current — Low	54 74			4.0 8.0	mA

DC CHARACTERISTICS OVER OPERATING TEMPERATURE RANGE (unless otherwise specified)

Symbol	Parameter		Limits Min	Limits Typ	Limits Max	Unit	Test Conditions	
V_{IH}	Input HIGH Voltage		2.0			V	Guaranteed Input HIGH Voltage for All Inputs	
V_{IL}	Input LOW Voltage	54			0.7	V	Guaranteed Input LOW Voltage for All Inputs	
		74			0.8			
V_{IK}	Input Clamp Diode Voltage			–0.65	–1.5	V	V_{CC} = MIN, I_{IN} = –18 mA	
V_{OH}	Output HIGH Voltage	54	2.5	3.5		V	V_{CC} = MIN, I_{OH} = MAX, V_{IN} = V_{IH} or V_{IL} per Truth Table	
		74	2.7	3.5		V		
V_{OL}	Output LOW Voltage	54, 74		0.25	0.4	V	I_{OL} = 4.0 mA	V_{CC} = V_{CC} MIN, V_{IN} = V_{IL} or V_{IH} per Truth Table
		74		0.35	0.5	V	I_{OL} = 8.0 mA	
I_{IH}	Input HIGH Current All Others Input 0 (LS748) Inputs 1–7 (LS148) Inputs 1–7 (LS748)				 20 40 40 60	µA	V_{CC} = MAX, V_{IN} = 2.7 V	
	All Others Input 0 (LS748) Inputs 1–7 (LS148) Inputs 1–7 (LS748)				0.1 0.2 0.2 0.3	mA	V_{CC} = MAX, V_{IN} = 7.0 V	
I_{IL}	Input LOW Current All Others Input 0 (LS748) Inputs 1–7 (LS148) Inputs 1–7 (LS748)				 –0.4 –0.8 –0.8 –1.2	mA	V_{CC} = MAX, V_{IN} = 0.4 V	
I_{OS}	Short Circuit Current (Note 1)		–20		–100	mA	V_{CC} = MAX	
I_{CCH}	Power Supply Current Output HIGH				17	mA	V_{CC} = MAX, All Inputs = 4.5 V	
I_{CCL}	Output LOW				20	mA	V_{CC} = MAX, Inputs 7 & E1 = GND All Other Inputs = 4.5 V	

Note 1: Not more than one output should be shorted at a time, nor for more than 1 second.

AC CHARACTERISTICS (V_{CC} = 5.0 V, T_A = 25°C)

SN54/74LS147

Symbol	From (Input)	To (Output)	Waveform	Limits Min	Limits Typ	Limits Max	Unit	Test Conditions
t_{PLH}	Any	Any	In-phase output		12	18	ns	C_L = 15 pF, R_L = 2.0 kΩ
t_{PHL}					12	18		
t_{PLH}	Any	Any	Out-of-phase output		21	33	ns	
t_{PHL}					15	23		

SN54/74LS148
SN54/74LS748

Symbol	From (Input)	To (Output)	Waveform	Limits Min	Limits Typ	Limits Max	Unit	Test Conditions
t_{PLH}	1 thru 7	A0, A1, or A2	In-phase output		14	18	ns	C_L = 15 pF, R_L = 2.0 kΩ
t_{PHL}					15	25		
t_{PLH}	1 thru 7	A0, A1, or A2	Out-of-phase output		20	36	ns	
t_{PHL}					16	29		
t_{PLH}	0 thru 7	EO	Out-of-phase output		7.0	18	ns	
t_{PHL}					25	40		
t_{PLH}	0 thru 7	GS	In-phase output		35	55	ns	
t_{PHL}					9.0	21		
t_{PLH}	EI	A0, A1, or A2	In-phase output		16	25	ns	
t_{PHL}					12	25		
t_{PLH}	EI	GS	In-phase output		12	17	ns	
t_{PHL}					14	36		
t_{PLH}	EI	EO	In-phase output		12	21	ns	
t_{PHL}					28 30	40 45		(LS148) (LS748)

Case 751B-03 D Suffix
16-Pin Plastic
SO-16

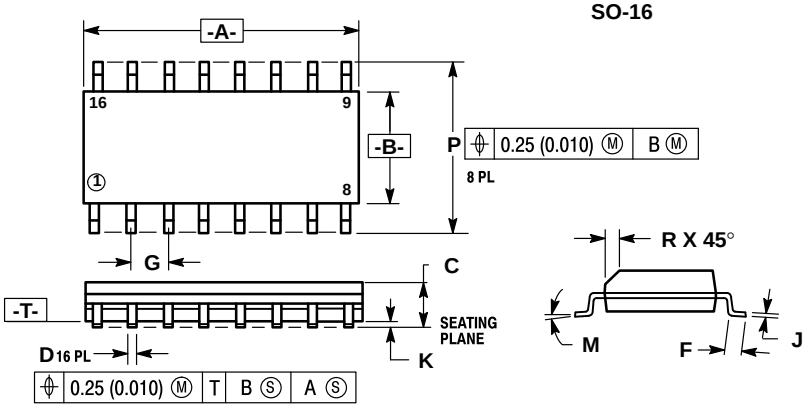

NOTES:
1. DIMENSIONING AND TOLERANCING PER ANSI Y14.5M, 1982.
2. CONTROLLING DIMENSION: MILLIMETER.
3. DIMENSION A AND B DO NOT INCLUDE MOLD PROTRUSION.
4. MAXIMUM MOLD PROTRUSION 0.15 (0.006) PER SIDE.
5. 751B-01 IS OBSOLETE, NEW STANDARD 751B-03.

	MILLIMETERS		INCHES	
DIM	MIN	MAX	MIN	MAX
A	9.80	10.00	0.386	0.393
B	3.80	4.00	0.150	0.157
C	1.35	1.75	0.054	0.068
D	0.35	0.49	0.014	0.019
F	0.40	1.25	0.016	0.049
G	1.27 BSC		0.050 BSC	
J	0.19	0.25	0.008	0.009
K	0.10	0.25	0.004	0.009
M	0°	7°	0°	7°
P	5.80	6.20	0.229	0.244
R	0.25	0.50	0.010	0.019

Case 648-08 N Suffix
16-Pin Plastic

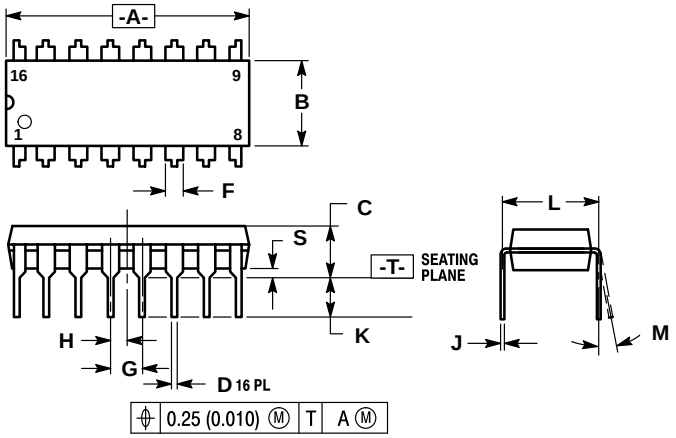

NOTES:
1. DIMENSIONING AND TOLERANCING PER ANSI Y14.5M, 1982.
2. CONTROLLING DIMENSION: INCH.
3. DIMENSION "L" TO CENTER OF LEADS WHEN FORMED PARALLEL.
4. DIMENSION "B" DOES NOT INCLUDE MOLD FLASH.
5. ROUNDED CORNERS OPTIONAL.
6. 648-01 THRU -07 OBSOLETE, NEW STANDARD 648-08.

	MILLIMETERS		INCHES	
DIM	MIN	MAX	MIN	MAX
A	18.80	19.55	0.740	0.770
B	6.35	6.85	0.250	0.270
C	3.69	4.44	0.145	0.175
D	0.39	0.53	0.015	0.021
F	1.02	1.77	0.040	0.070
G	2.54 BSC		0.100 BSC	
H	1.27 BSC		0.050 BSC	
J	0.21	0.38	0.008	0.015
K	2.80	3.30	0.110	0.130
L	7.50	7.74	0.295	0.305
M	0°	10°	0°	10°
S	0.51	1.01	0.020	0.040

Case 620-09 J Suffix
16-Pin Ceramic Dual In-Line

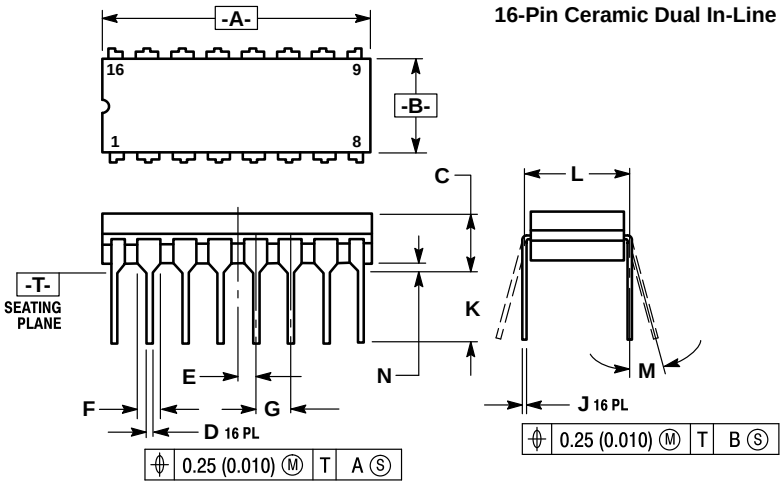

NOTES:
1. DIMENSIONING AND TOLERANCING PER ANSI Y14.5M, 1982.
2. CONTROLLING DIMENSION: INCH.
3. DIMENSION L TO CENTER OF LEAD WHEN FORMED PARALLEL.
4. DIM F MAY NARROW TO 0.76 (0.030) WHERE THE LEAD ENTERS THE CERAMIC BODY.
5. 620-01 THRU -08 OBSOLETE, NEW STANDARD 620-09.

	MILLIMETERS		INCHES	
DIM	MIN	MAX	MIN	MAX
A	19.05	19.55	0.750	0.770
B	6.10	7.36	0.240	0.290
C	—	4.19	—	0.165
D	0.39	0.53	0.015	0.021
E	1.27 BSC		0.050 BSC	
F	1.40	1.77	0.055	0.070
G	2.54 BSC		0.100 BSC	
J	0.23	0.27	0.009	0.011
K	—	5.08	—	0.200
L	7.62 BSC		0.300 BSC	
M	0°	15°	0°	15°
N	0.39	0.88	0.015	0.035

Motorola reserves the right to make changes without further notice to any products herein. Motorola makes no warranty, representation or guarantee regarding the suitability of its products for any particular purpose, nor does Motorola assume any liability arising out of the application or use of any product or circuit, and specifically disclaims any and all liability, including without limitation consequential or incidental damages. “Typical” parameters can and do vary in different applications. All operating parameters, including “Typicals” must be validated for each customer application by customer’s technical experts. Motorola does not convey any license under its patent rights nor the rights of others. Motorola products are not designed, intended, or authorized for use as components in systems intended for surgical implant into the body, or other applications intended to support or sustain life, or for any other application in which the failure of the Motorola product could create a situation where personal injury or death may occur. Should Buyer purchase or use Motorola products for any such unintended or unauthorized application, Buyer shall indemnify and hold Motorola and its officers, employees, subsidiaries, affiliates, and distributors harmless against all claims, costs, damages, and expenses, and reasonable attorney fees arising out of, directly or indirectly, any claim of personal injury or death associated with such unintended or unauthorized use, even if such claim alleges that Motorola was negligent regarding the design or manufacture of the part. Motorola and ⓜ are registered trademarks of Motorola, Inc. Motorola, Inc. is an Equal Opportunity/Affirmative Action Employer.

Literature Distribution Centers:
USA: Motorola Literature Distribution; P.O. Box 20912; Phoenix, Arizona 85036.
EUROPE: Motorola Ltd.; European Literature Centre; 88 Tanners Drive, Blakelands, Milton Keynes, MK14 5BP, England.
JAPAN: Nippon Motorola Ltd.; 4-32-1, Nishi-Gotanda, Shinagawa-ku, Tokyo 141, Japan.
ASIA PACIFIC: Motorola Semiconductors H.K. Ltd.; Silicon Harbour Center, No. 2 Dai King Street, Tai Po Industrial Estate, Tai Po, N.T., Hong Kong.