4611110009476

# 混合式步进电机规格书

# HYBRID STEPPING MOTOR SPECIFICATIONS

制造商: 上海鸣志电器有限公司
Manufacturer: SHANGHAI MOONS' ELECTRIC CO., LTD.

电机型号 MODEL No.: 17HD2071-01N

客户型号 CUSTOMER'S MODEL No.:

1. 适用 SCOPE

本规格书包含了对步进电机的综合要求。

This specification covers the general requirements for the stepping motor

2. 引用文件 APPLICABLE DOCUMENTS

IEC 60034-1: 旋转电机 第1部分: 定额和性能

IEC 60034-1: Rotating electrical machines
Part 1: Rating and performance

IEC TS60034-20-1: 旋转电机-第20-1部分: 控制电机-步进电机

IEC TS60034-20-1: Rotating electric machine
Part 20-1:Control motors-Stepping motors

3. 定额 RATING

3-1 步距角 Step Angle ------ 1.8°/整步full step

3-2 相数 Number of Phase ------ 4

3-3 额定电压 Rated Voltage ------ 4.8V DC

3-4 额定电流(微步驱动时的峰值) Rated Current(peak value when microstep) ------ 1.2A

3-5 绝缘等级 Insulation Class ------ Class B

3-6 驱动电压 Source Voltage ------ 24V DC

表示供电电源施加在驱动回路上的电压。在恒压驱动方式下，它和额定电压相同。

Indicates the voltage that the power supplier applys to the driver circuit.

It is same as the rated voltage when motor is drived on a constant voltage model.

4. 电气特性 ELCETRICAL CHARACTERISTICS

4-1 线圈电阻/相 Coil Resistance/phase ------4.0Ω±10% (20°C)

4-2 线圈电感/相 Coil Inductance/phase ------ 5.0mH±20% (1kHz 1V rms)

4-3 保持力矩 Holding torque ------ 0.34N.m (两相通电/额定电流 two phase on/rated current)

4-4 定位力矩 Detent torque ------ 约 Approximately 12mN.m

4-5 步距角精度 Step angle accuracy ------ ±5%

测试条件: 恒流驱动器/24V/两相通电/额定电流/整步速度: 1pps/小野测器: PV7300

Testing condition: Constant current driver/24V/Two phase on/Rated current/Speed:1pps(Full step)

Ono sokki: PV7300

动态性能测试电路

Testing Circuit for Dynamic Performance 4-6, 4-7, 4-8, 4-9.

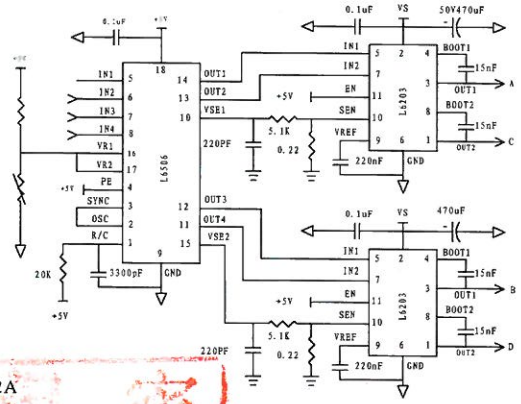


4-6 空载运行频率 Slew rate with no load ------ N/A

测试条件: 驱动电压直流24V/额定电流/半步驱动

Testing condition: Source Voltage 24V/Half step

4-7 空载起动频率 Pull-in rate with no load ------ N/A

测试条件: 驱动电压直流24V/额定电流/半步驱动

Testing condition: Source Voltage 24V/Half step

4-8 运行力矩 Pull out torque

测试条件: 驱动电压直流24V/额定电流/半步驱动

Testing condition: Source Voltage 24V/Half step

@1000pps ------ N/A

@2000pps ------ N/A

@3000pps ------ N/A

4-9 起动力矩 Pull in torque

测试条件: 驱动电压直流24V/额定电流/半步驱动

Testing condition: Source Voltage 24V/Half step

@600pps ------ N/A

@900pps ------ N/A

4-10 反电动势 Back ElectroMotive Force ------ N/A

测试条件: 驱动电机的转轴到一个恒定的转速: 300RPM, 测量绕组两端电压的有效值。

Testing condition: The back EMF is the RMS value measured across the coils, carrying the motor shaft at the constant speed of 300 RPM.

| REV. | 版本记录 REVISION RECORD | DATE |
|---|---|---|
| G | | |
| F | | |
| E | | |
| D | | |
| C | | |
| B | 增加线束 Add wiring harness | 2012.02.06 |
| A | 原始版本 Original revision | 2011.10.26 |

Unit: mm
第一角画法 FIRST ANGLE METHOD
未注线性与角度尺寸公差 Tolerances for linear and angular dimensions without individual tolerance indications GB/T 1804-m eqv ISO 2768-1:m
未注形状与位置尺寸公差 Geometrical tolerance for features without individual tolerance indications GB/T 1184-K eqv ISO 2768-2:K

UNLESS OTHERWISE SPECIFIED

| NAMES | SIGNATURE | DATE |
|---|---|---|
| 批准 Approve | | 2.7 |
| 标准化 Standard | | |
| 工艺 Technology | | 12.02.06 |
| 审核 Check | | 12.02.06 |
| 设计 Design | 张菊菊 | 2012.02.06 |

备注 Comment:

17HD2071-01N | Rev. B | SCALE 1:1 | SHEET 1 OF 3

4611110009476

4-11 绝缘电阻 Insulation resistance ------ 大于100MΩ More than 100MΩ

测试条件：线圈和电机外壳之间，直流500V。

Testing condition: Between coils and frame, 500V DC。

4-12 介电强度 Dielectric strength ------ 交流500V 50/60Hz 1分钟/ 500V AC 1 minute

测试条件：在引线和外壳之间施加交流500V（有效值） 50/60Hz，

电机可以保持1分钟无击穿。漏电流小于3mA。

Testing condition: Motor is capable of withstanding with out break down,

when 500V AC (RMS value) for period of 1 minute between motor frame and lead wires.

Cut off current is less than 3mA.

4-13 温升 Temperature rise ------ 小于80°C less than 80°C

温升是指在一定环境温度条件下，线圈温度增加的最大值。绕组温度的测试采用电阻法。

在恒压驱动模式下，驱动电压为额定电压，两相通电，转速为0pps。

在恒流驱动模式下，驱动电流为额定电流，两相通电，转速为空载起动频率。

散热板：铝板160×160×t1.6(mm)

Temperature rise is the maximun coil temperaure increase respect to the ambient temperature.

Coil temperature is measured with resistance method.

Two phase on rated voltage at 0 pps speed when constant voltage driving model.

Two phase on rated current at pull in rate speed when constant current driving model.

Al heat sink plate: 160×160×t1.6(mm)

5. 机械特性 Mechanical Characteristics

5-1 外形尺寸 Outline Dimentions ------ 见第3页/ See sheet 3.

5-2 转轴材料 Material of shaft ------ 不锈钢 Stainless steel

5-3 磁钢材料 Material of magnet ------ 稀土合金 Rare earth alloy

5-4 端盖材料 Material of end bell ------ 铸铝合金 Aluminum alloy die casting

5-5 轴承 Bearing ------ 双面防尘盖深沟球轴承 Double shield deep groove ball bearing

5-6 铭牌 Label ------ 喷印于后端盖 Ink jet printing on the rear end bell

5-7 转子惯量 Rotor Inertia ------ 约 Approximately 57g.cm^2

5-8 重量 Mass ------ 约 Approximately 280g

5-9 转轴轴向位移 End play of the shaft ------ 0.08mm@500gf

5-10 转轴径向位移 Radial play of the shaft ------ 0.02mm@500gf

保密

6. 应用条件 Application conditions

6-1 运行环境条件 Operating environment conditions

6-1-1 环境温度 Ambient temperature ------ -20°C ~ +50°C

6-1-1 环境湿度 Ambient humidity ------ 15% ~ 85%（无积露/No condensation）

6-2 储藏环境条件 Storage envirenment conditions

6-2-1 环境温度 Storage temperature ------ -30°C ~ +70°C

6-2-1 环境湿度 Storage humidity ------ 15% ~ 85%（无积露/No condensation）

6-3 转轴负载条件 Shaft load condition

6-3-1 轴向动态负载 Dynamic axial load ------ 10N Max.

6-3-2 径向动态负载 Dynamic radial load ------ 21N Max.

7. 保证和可靠性 Warranty and Reliability

7-1 保证：在产品交货一年内，由于制造商的错误或疏忽引起的产品问题，

制造商应提供产品的维修或替换。

Warranty: If failure occurs due to manufacturing defect within one year,

the manufacturer shall repair or replace the motor

7-2 可靠性 Reliability ------ MTBF 6000小时以上 MTBF 6000 hours or more.

使用条件：环境温度25°C，使用率100%，两相通电，额定电流，旋转速度整步1000pps。

Application condition: Ambient temperature 25°C, Duty cycle 100%, Rated current,

two phase on, Speed 1000pps, full step.

8. 注意 Caution:

8-1 请勿拎电机的引线或PCB板。Please do not hold motor by PCB or lead wires.

8-2 请勿带电插拔电机连接器。Please do not connect/disconnect the motor connector while power on.

8-3 请勿朝坚硬物体摔掷电机，这种撞击导致的失效在开始阶段可能不会被发现。

但在以后会被发现，这类不当使用不在我们的保质范围内。

Please do not drop, hurl or dump motor against hard material. Malfunction may not be observed at early stage after such shock, But it may be found later,This type mishandling voids our warranty.

8-4 请注意应用，因为该电机无任何关于过压、温升、反接以及外部（电磁）噪音的保护电路。

Please pay attention for handling because this motor has no protection circuits for overvoltage, temperature rise, opposing connection, foreign noise ect.

8-5 请勿重新使用拆解过的电机。Please do not use disassembled motor again.

| REV. | 版本记录 REVISION RECORD | DATE |
|---|---|---|
| G | | |
| F | | |
| E | | |
| D | | |
| C | | |
| B | 增加线束 Add wiring harness | 2011.12.26 |
| A | 原始版本 Original revision | 2011.10.26 |

Unit：mm

第一角画法 FIRST ANGLE METHOD

未注线性与角度尺寸公差 Tolerances for linear and angular dimensions without individual tolerance indications GB/T 1804-m eqv ISO 2768-1:m

未注形状与位置尺寸公差 Geometrical tolerance for features without individual tolerance indications GB/T 1184-K eqv ISO 2768-2:K

UNLESS OTHERWISE SPECIFIED

| NAMES | SIGNATURE | DATE |
|---|---|---|
| 批准 Approve | | |
| 标准化 Standard | | |
| 工艺 Technology | | 12.02.06 |
| 审核 Check | | 12.02.06 |
| 设计 Design | 张菊菊 | 2012.02.06 |

备注 Comment:

| 17HD2071-01N | Rev. B | SCALE 1:1 | SHEET 2 OF 3 |
|---|---|---|---|

4611110009476

9 接线图

WIRING DIAGRAM

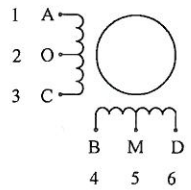


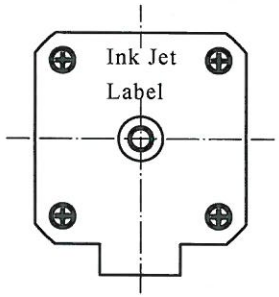


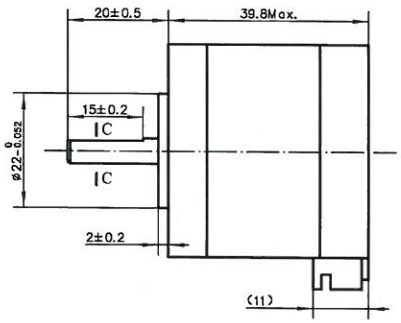


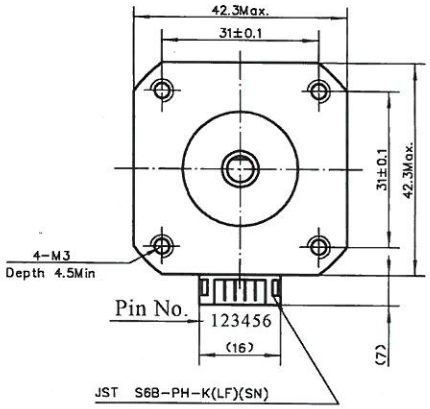


10 励磁顺序vs.旋转方向

Exciting Sequence vs. Direction of rotation

| STEP | A | B | C | D | O | M |
|---|---|---|---|---|---|---|
| 1 | − | − | | | + | + |
| 2 | | − | − | | + | + |
| 3 | | | − | − | + | + |
| 4 | − | | | − | + | + |

cw ↓ ↑ ccw

以两相通电为例

Case by two phase on

从电机的安装端看，
按照表格规定的励磁顺序，
电机将产生顺时针方向旋转。

Exciting sequence as the table specified
will produce clockwise rotation
when viewed from mounting end.

C-C
2:1

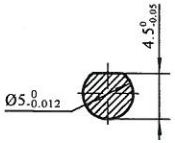


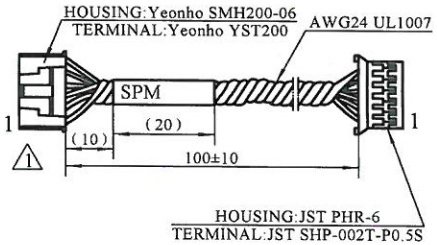


11 连接器针位vs.引线颜色 ⚠1

Pin No. vs. Lead Wire Colour

| PHR-6 PIN No. | SMH200-06 PIN No. | 颜色 Colour |
|---|---|---|
| 1 | 1 | 蓝 BLU |
| 2 | 2 | 白 WHT |
| 3 | 3 | 红 RED |
| 4 | 4 | 绿 GRN |
| 5 | 5 | 黄 YEL |
| 6 | 6 | 黑 BLK |

铭牌 Label Detail

MOONS' STEPPING MOTOR
TYPE 17HD2071-01N
XXXXXXXX YY/MM/DD
MADE IN CHINA

Work Order
加工单号

Date Format
日期格式

保密

| REV. | 版本记录 REVISION RECORD | DATE |
|---|---|---|
| G | | |
| F | | |
| E | | |
| D | | |
| C | | |
| B | 增加线束 Add wiring harness ⚠1 | 2012.02.06 |
| A | 原始版本 Original revision | 2011.10.26 |

Unit: mm
第一角画法
FIRST ANGLE METHOD
未注线性与角度尺寸公差
Tolerances for linear and angular dimensions without individual tolerance indications
GB/T 1804-m eqv ISO 2768-1:m
未注形状与位置尺寸公差
Geometrical tolerance for features without individual tolerance indications
GB/T 1184-K eqv ISO 2768-2:K

UNLESS OTHERWISE SPECIFIED

| NAMES | SIGNATURE | DATE |
|---|---|---|
| 批准 Approve | | 2.7 |
| 标准化 Standard | | 2/6 |
| 工艺 Technology | | 12.02.06 |
| 审核 Check | | 12.02.07 |
| 设计 Design | 张菊菊 | 2012.02.06 |

备注 Comment:

17HD2071-01N | Rev. B | SCALE 1:1 | SHEET 3 OF 3